Sensors

Techniques and applications 2
CAN-Bus 4

Angular-position sensors
Steering-wheel-angle sensors ±780° 6
Throttle-valve angular-position sensors 88° 8

Yaw-rate sensors 10

Rotational-speed sensors
Rotational speeds and angle 12
Rotational speeds 14

Acceleration sensors
Pyroelectric sensors up to ±5 *g* 16
Piezoelectric sensors up to 35 *g* 18
Surface-type micromechanical sensors ±10 *g* to ±50 *g* 20
Piezoelectric vibration sensors 22
Vibration sensors for signal evaluation 24

Pressure sensors
Pressure measurement
- In gases from −100 kPa to 5 kPa 26
- In gases and liquid mediums from −2.5 kPa to +3.75 kPa 28
- In atmosphere from 60 kPa to 115 kPa 30
- In gases up to 250 kPa 32
- In gases up to 400 kPa 34
- In gases and liquid mediums up to 600 kPa 40

Pressure sensors up to 1800 bar (180 MPa) 45

Temperature sensors
Air temperatures from −40 °C to 130 °C 50
Liquid temperatures from −40 °C to 130 °C 52

Air-mass meters
Air-mass flow rates up to 1080 kg/h 54
Air-mass flow rates up to 1000 kg/h 56

Lambda oxygen sensors 58

Enquiry data sheet 61

We reserve the right to make technical changes.

Techniques and applications

This catalog features the most important technical data required for selecting a given sensor. To date, the sensors listed have all been used in automotive applications, but their universal and highly versatile characteristics also make them ideally suitable for industrial applications. For instance in:

- Manufacturing engineering
- Mechanical engineering
- Automation
- Materials handling and conveying
- Heating and air-conditioning
- Chemical and process engineering
- Environmental and conservation technology
- Installation and plant engineering

Brief descriptions and examples of application are to be found in the Table below.
For the applications listed below, prior clarification of the technical suitability is imperative. This Catalog only lists those products which are available from series manufacture. If your problem cannot be solved with this range of products, please inform of us of your requirements using the Enquiry Data Sheet.

Sensors	Automotive application	Examples of non-automotive applications
Angular position sensors measure simple angular settings and changes in angle.	Throttle-valve-angle measurement for engine management on gasoline (SI) engines.	Door/window opening angle, setting-lever angles in monitoring and control installations.
Rotational-speed sensors measure rotational speeds, positions and angles in excess of 360°.	Wheel-speed measurement for ABS/TCS, engine speeds, positioning angle for engine management, measurement of steering-wheel angle, distance covered, and curves/bends for vehicle navigation systems.	Proximity or non-contact measurement of rotational speed, displacement and angular measurement, definition of end and limit settings for industrial machines, robots, and installations of all types.
Spring-mass acceleration sensors measure changes in speed, such as are common in road traffic.	Registration of vehicular acceleration and deceleration. Used for the Antilock Braking System (ABS) and the Traction Control System (TCS).	Acceleration and deceleration measurement for safety, control, protective systems in lifts, cable railways, fork-lift trucks, conveyor belts, machines, wind power stations.
Bending-beam acceleration sensors register shocks and vibration which are caused by impacts on rough/unpaved road surfaces or contact with kerbstones.	For engine management, detection of vibration on rough/unpaved road surfaces.	Forced switch-off for machines, industrial robots, manufacturing plant, and gaming machines in case of sudden acceleration or deceleration caused by shock or impact.
Piezoelectric acceleration sensors measure shocks and vibration which occur when vehicles and bodies impact against an obstacle.	Impact detection used for triggering airbags and belt tighteners.	Detection of impact in monitoring/surveillance installations, detection of foreign bodies in combine harvesters, filling machines, and sorting plants. Registration of score during rifleman competitions.
Yaw sensors measure skidding movements, such as occur in vehicles under road traffic conditions.	Used on the vehicle dynamics control (Electronic Stability Program, ESP) for measuring yaw rate and lateral acceleration, and for vehicle navigation sensors.	Stabilization of model vehicles and airplanes, safety circuits in carousels and other entertainment devices on fairgrounds etc.
Piezoelectric vibration sensors measure structure-borne vibrations which occur at engines, machines, and pivot bearings.	Engine-knock detection for anti-knock control in engine-management systems.	Machine-tool safety, cavitation detection, pivot-bearing monitoring, structure-borne-noise detection in measurement systems.
Absolute-pressure sensors measure the pressure ranges from about 50% to 500% of the earth's atmospheric pressure.	Manifold vacuum measurement for engine management. Charge-air-pressure measurement for charge-air pressure control, altitude-pressure-dependent fuel injection for diesel engines.	Pressure control in electronic vacuum cleaners, monitoring of pneumatic production lines, meters for air-pressure, altitude, blood pressure, manometers, storm-warning devices.
Differential-pressure sensors measure differential gas pressures, e.g. for pressure-compensation purposes.	Pressure measurement in the fuel tank, evaporative-emissions control systems.	Monitoring of over and underpressure. Pressure limiters, filled-level measurement.
Temperature sensors measure the temperature of gaseous materials and, inside a suitable housing, the temperatures of liquids in the temparature range of the earth's atmosphere and of water.	Display of outside and inside temperature, control of air conditioners and inside temperature, control of radiators and thermostats, measurement of lube-oil, coolant, and engine temperatures.	Thermometers, thermostats, thermal protection, frost detectors, air-conditioner control, temperature and central heating, refrigerant-temperature monitoring, regulation of hot-water and heat pumps.
Lambda oxygen sensors determine the residual oxygen content in the exhaust gas.	Control of A/F mixture for minimization of pollutant emissions on gasoline and gas engines.	Pollutants reduction during combustion, smoke measurement, gas analysis.
Air-mass meters measure the flow rate of gases.	Measurement of the mass of the air drawn in by the engine.	Flow-rate measurement for gases on test benches and in combustion plant.

IP degrees of protection

Valid for the electrical equipment of road vehicles as per DIN 40 050 (Part 9).

- Protection of the electrical equipment inside the enclosure against the effects of solid foreign objects including dust.
- Protection of the electrical equipment inside the enclosure against the ingress of water.
- Protection of persons against contact with dangerous parts, and rotating parts, inside the enclosure.

Structure of the IP code

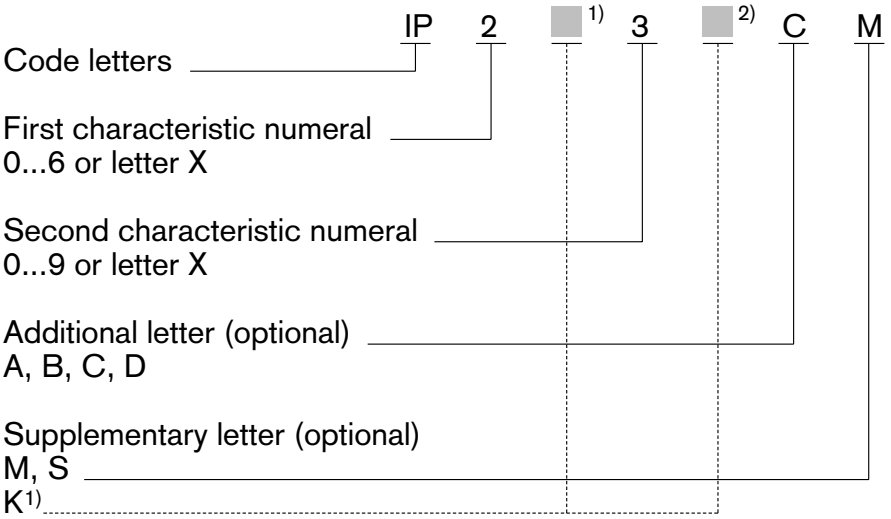

If a characteristic numeral is not given, it must be superseded by the letter "X" (i.e. "XX" if both characteristic numerals are not given).
The supplementary and/or additional letters can be omitted at will, and need not be superseded by other letters.

1) The supplementary letter "K" is located either directly after the first characteristic numerals 5 and 6, or directly after the second characteristic numerals 4, 6 and 9.

2) During the water test. Example: IP16KB protection against the ingress of solid foreign bodies with diameter ≥ 50 mm, protection against high-pressure hose water, protection against access with a finger.

Comments on IP code

1st characteristic numeral and supplementary letter K	Protection of electrical equipment against ingress of solid foreign objects	Persons	2nd characteristic numeral and supplementary letter K	Protection of electrical equipment against the ingress of water	Additional letter (optional)	Protection of persons against contact with hazardous parts	Additional letter (optional)	
0	Non-protected	Non-protected	0	Non-protected	A	Protection against contact with back of hand	M	Movable parts of the equipment are in motion2)
1	Protection against foreign bodies Ø ≥ 50 mm	Protection against contact with back of hand	1	Protection against vertically dripping water	B	Protection against contact with finger	S	Movable parts of the equipment are stationary2)
2	Protection against foreign bodies Ø ≥ 12.5 mm	Protection against contact with finger	2	Protection against dripping water (at an angle of 15°)	C	Protection against contact with tool	K	For the electrical equipment of road vehicles
3	Protection against foreign bodies Ø ≥ 2.5 mm	Protection against contact with tool	3	Protection against splash water	D	Protection against contact with wire		
4	Protection against foreign bodies Ø ≥ 1.0 mm	Protection against contact with wire	4	Protection against spray water				
5K	Dust-protected	Protection against contact with wire	4K	Protection against high-pressure spray water				
6K	Dust-proof	Protection against contact with wire	5	Protection against jets of water				
			6	Protection against powerful jets of water				
			6K	Protection against high-pressure jets of water				
			7	Protection against temporary immersion				
			8	Protection against continuous immersion				
			9K	Protection against high-pressure/steam-jet cleaners				

CAN-Bus

Controller Area Network

Present-day motor vehicles are equipped with a large number of electronic control units (ECUs) which have to exchange large volumes of data with one another in order to perform their various functions. The conventional method of doing so by using dedicated data lines for each link is now reaching the limits of its capabilities. On the one hand, it makes the wiring harnesses so complex that they become unmanageable, and on the other the finite number of pins on the connectors becomes the limiting factor for ECU development. The solution is to be found in the use of specialized, vehicle-compatible serial bus systems among which the CAN has established itself as the standard.

Applications
There are four areas of application for CAN in the motor vehicle, each with its own individual requirements:

Real-time applications
Real-time applications, in which electrical systems such as Motronic, transmission-shift control, electronic stability-control systems are networked with one another, are used to control vehicle dynamics.
Typical data transmission rates range from 125 kbit/s to 1 Mbit/s (high-speed CAN) in order to be able to guarantee the real-time characteristics demanded.

Multiplex applications
Multiplex applications are suitable for situations requiring control and regulation of body-component and luxury/convenience systems such as air conditioning, central locking and seat adjustment.
Typical data transmission rates are between 10 kbits and 125 kbit/s (low-speed CAN).

Mobile-communications applications
Mobile-communications applications connect components such as the navigation system, cellular phone or audio system with central displays and controls. The basic aim is to standardize control operations and to condense status information so as to minimize driver distraction.
Data transmission rates are generally below 125 kbit/s; whereby direct transmission of audio or video data is not possible.

Diagnostic applications
Diagnostic applications for CAN aim to make use of existing networking for the diagnosis of the ECUs incorporated in the network. The use of the “K” line (ISO 9141), which is currently the normal practice, is then no longer necessary.
The data rate envisaged is 500 kbit/s.

Bus configuration
CAN operates according to the multi-master principle, in which a linear bus structure connects several ECUs of equal priority rating (Fig. ①). The advantage of this type of structure lies in the fact that a malfunction at one node does not impair bus-system access for the remaining devices. Thus the probability of a total system failure is substantially lower than with other logical architectures (such as ring or active star structures). When a ring or active star structure is employed, failure at a single node or at the CPU is sufficient to cause a total failure.

Content-based addressing
Addressing is message-based when using CAN. This involves assigning a fixed identifier to each message. The identifier classifies the content of the message (e.g., engine speed). Each station processes only those messages whose identifiers are stored in its acceptance list (message filtering, Fig. ②). Thus CAN requires no station addresses for data transmission, and the nodes are not involved in administering system configuration. This facilitates adaptation to variations in equipment levels.

Logical bus states
The CAN protocol is based on two logical states: The bits are either “recessive” (logical 1) or “dominant” (logical 0). When at least one station transmits a dominant bit, then the recessive bits simultaneously sent from other stations are overwritten.

Priority assignments
The identifier labels both the data content and the priority of the message being sent. Identifiers corresponding to low binary numbers enjoy a high priority and vice versa.

Bus access
Each station can begin transmitting its most important data as soon as the bus is unoccupied. When several stations start to transmit simultaneously, the system responds by employing “Wired-AND” arbitration to sort out the resulting contentions over bus access. The message with the highest priority is assigned first access, without any bit loss or delay. Transmitters respond to failure to gain bus access by automatically switching to receive mode; they then repeat the transmission attempt as soon as the bus is free again.

Message format
CAN supports two different data-frame formats, with the sole distinction being in the length of the identifier (ID). The standard-format ID is 11 bits, while the extended version consists of 29 bits. Thus the transmission data frame contains a maximum of 130 bits in standard format, or 150 bits in the extended format. This ensures miminal waiting time until the subsequent transmission (which could be urgent). The data frame consists of seven consecutive bit fields (Fig. ③):

“Start of frame”
indicates the beginning of a message and synchronizes all stations.
“Arbitration field”
consists of the message’s identifier and an additional control bit. While this field is being transmitted, the transmitter accompanies the transmission of each bit with a check to ensure that no higher-priority message is being transmitted (which would cancel the access authorization). The control bit determines whether the message is classified under “data frame” or “remote frame”.
“Control field”
contains the code indicating the number of data bytes in the data field.
“Data field’s”
information content comprises between 0 and 8 bytes. A message of data length 0 can be used to synchronize distributed processes.
“CRC field”
(Cyclic Redundancy Check) contains the check word for detecting possible transmission interference.
“Ack field”
contains the acknowledgement signals with which all receivers indicate receipt of non-corrupted messages.
“End of frame”
marks the end of the message.

① **Linear bus structure.**

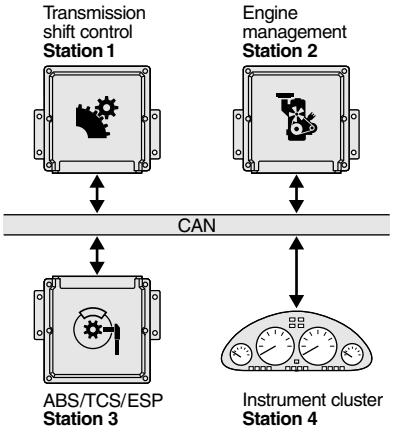

② **Message filtering.**

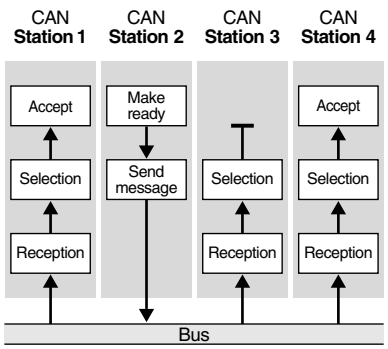

③ **Message format.**

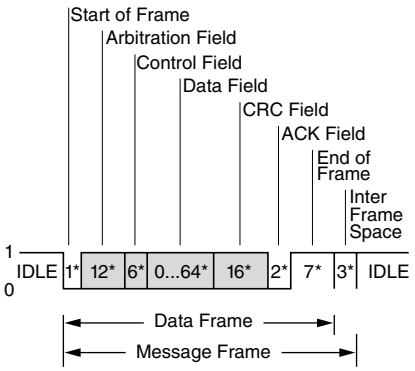

Transmitter initiative
The transmitter will usually initiate a data transfer by sending a data frame. However, the receiver can also request data from the transmitter. This involves the receiver sending out a "remote frame". The "data frame" and the corresponding "remote frame" have the same identifier. They are distinguished from one another by means of the bit that follows the identifier.

Error detection
CAN incorporates a number of monitoring features for detecting errors. These include:
- 15 Bit CRC (Cyclic Redundancy Check): Each receiver compares the CRC sequence which it receives with the calculated sequence.
- Monitoring: Each transmitter compares transmitted and scanned bit.
- Bit stuffing: Between "start of frame" and the end of the "CRC field", each "data frame" or "remote frame" may contain a maximum of 5 consecutive bits of the same polarity. The transmitter follows up a sequence of 5 bits of the same polarity by inserting a bit of the opposite polarity in the bit stream; the receivers eliminate these bits as the messages arrive.
- Frame check: The CAN protocol contains several bit fields with a fixed format for verification by all stations.

Error handling
When a CAN controller detects an error, it aborts the current transmission by sending an "error flag". An error flag consists of 6 dominant bits; it functions by deliberately violating the conventions governing stuffing and/or formats.

Fault confinement with local failure
Defective stations can severely impair the ability to process bus traffic. Therefore, the CAN controllers incorporate mechanisms which can distinguish between intermittent and permanent errors and local station failures. This process is based on statistical evaluation of error conditions.

Implementations
In order to provide the proper CPU support for a wide range of different requirements, the semiconductor manufacturers have introduced implementations representing a broad range of performance levels. The various implementations differ neither in the message they produce, nor in their arrangements for responding to errors. The difference lies solely in the type of CPU support required for message administration.
As the demands placed on the ECU's processing capacity are extensive, the interface controller should be able to administer a large number of messages and expedite data communications with, as far as possible, no demands on the CPU's computational resources. Powerful CAN controllers are generally used in this type of application.
The demands placed on the controllers by multiplex systems and present-day mobile communications are more modest. For that reason, more basic and less expensive chips are preferred for such uses.

Standardization
CANs for data exchange in automotive applications have been standardized both by the ISO and the SAE – in ISO 11519-2 for low-speed applications ≤ 125 kbit/s and in ISO 11898 and SAE J 22584 (cars) and SAE J 1939 (trucks and busses) for high-speed applications >125 kbit/s. There is also an ISO standard for diagnosis via CAN (ISO 15765 – Draft) in the course of preparation.

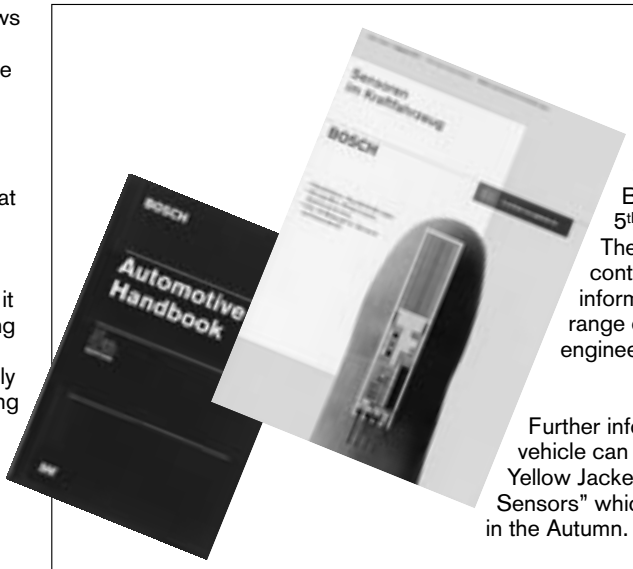

Source: Texts and illustrations on the subject of CAN-Bus are taken from the Bosch Automotive Handbook, 5th Edition, 2000.
The Automotive Handbook contains a very wide variety of information covering the whole range of modern-day automotive engineering.

Further information on sensors in the vehicle can be taken from the Bosch Yellow Jacket publication "Automotive Sensors" which is scheduled to appear in the Autumn.

Steering-wheel-angle sensor

Measurement of angles from –780° to +780°

φ CAN

- “True-Power-On” function.
- Multiple-rotation function.
- CAN interface.

Application
The steering-wheel-angle sensor was developed for use with vehicle dynamics systems (ESP*).
Due to integral plausibility tests, and special self-diagnosis functions, this steering-wheel-angle sensor is highly suitable for application in safety systems.

Design and function
When the steering wheel is turned it rotates a gearwheel which in turn drives two other special measuring gears which incorporate magnets. AMR elements which change their resistance as a function of the direction of magnetic field register the angular position of the magnets. These analog measured values are then inputted to the microprocessor via an A/D converter. The number of teeth on one measuring gear differs to that on the other, which means that they therefore change their rotational position at different speeds.
By combining both the actual angles of rotation, it is possible to calculate the total angle of rotation. After a number of rotations of the steering wheel, each of the measuring gears has returned to its initial position. Using this principle, it becomes possible to cover a measurement range of several steering-wheel rotations without the need to use a revolution counter.
The steering-wheel angle is outputted in the form of an absolute angle across the total steering-column rotation range. One of this sensor’s special features is the fact that the (correct) angle-of-rotation is available immediately the ignition is switched on, without the steering wheel having been moved (“True-Power-On”). The steering-wheel angle and the steering-wheel speed are outputted via CAN.
* ESP = Electronic Stability Program

Installation possibilities.
A Steering-column switch,
B Steering column

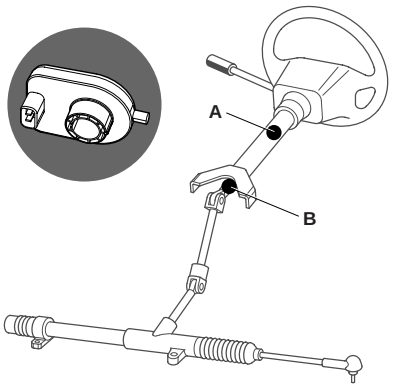

Design and function.
1 Steering column, **2** AMR sensor element, **3** Measuring gear with m teeth, **4** Evaluation electronics, **5** Magnets, **6** Measuring gear with n>m teeth, **7** Gearwheel with m+1 teeth

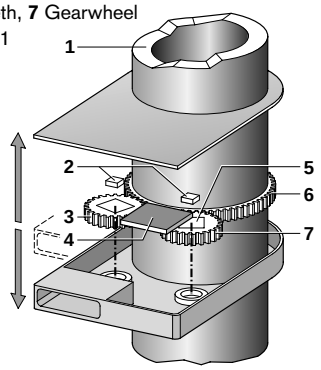

Technical data / Range

Order No.	**0 265 005 411** [1])
Steering-wheel-angle sensor/Type	LWS 3
Measuring range, angle	–780°...+779.9°
Measuring range, acceleration	0...1016°/s
Sensitivity and resolution throughout the measuring range, angle	0.1°
Sensitivity and resolution throughout the measuring range, acceleration	4°/s
Non-linearity throughout measuring range	–2.5°...+2.5°
Hysteresis throughout measuring range	0°...5°
Rate of steering-wheel-angle change, max.	–2000°...+2000°/s
Rate of steering-wheel-angle change, displayed	0°...1016°/s
General data	
Operating temperature	–40...+85 °C
Storage temperature	–40...+50 °C
Supply voltage	12 V nominal
Supply-voltage range U_V	8...16 V
Current consumption at 12 V	< 150 mA

[1]) Details of further designs upon request

Dimension drawings.

A Distance hub to mount
B Distance LWS (steering-wheel-angle sensor) to steering-column mounting flange
H Mounting bracket
M Mounting direction
P Space for mating connector and wiring harness
X Connector-pin assignment

Steering-column installation dimensions

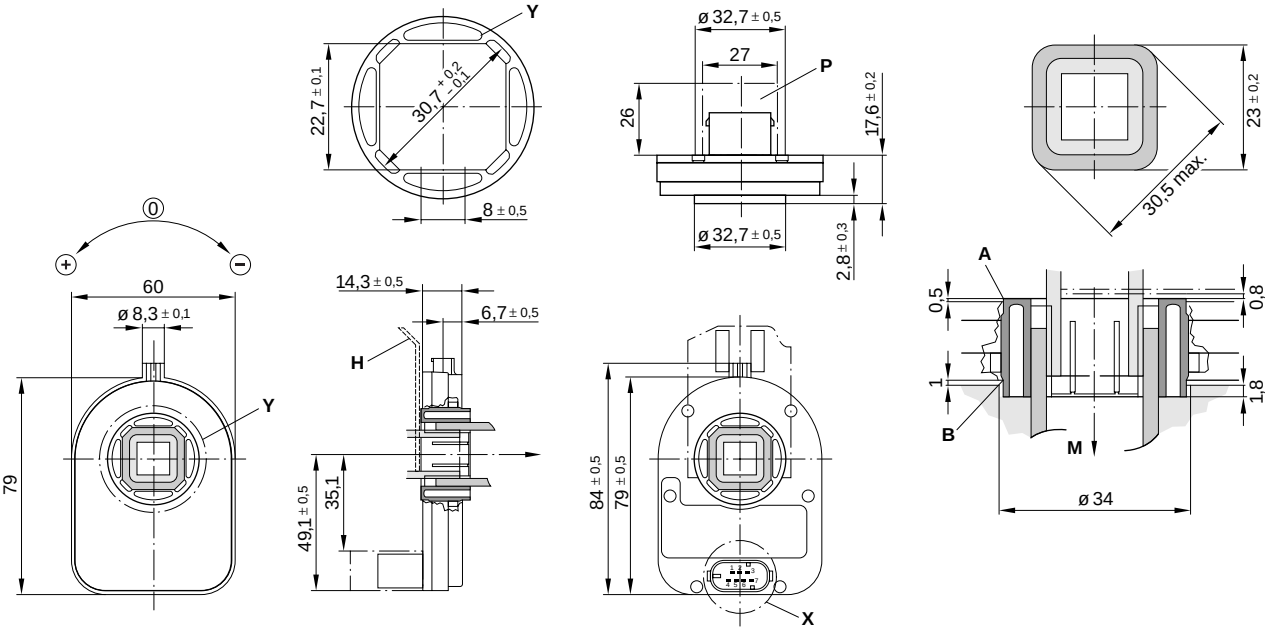

Characteristic curve.

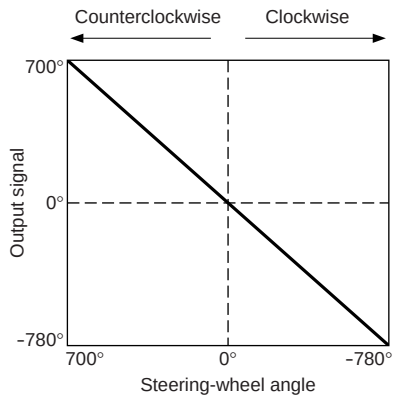

Connector-pin assignment.

Pin 1 Ground
Pin 2 12 V
Pin 3 CAN high
Pin 4 CAN low
Pin 5 –
Pin 6 –
Pin 7 –

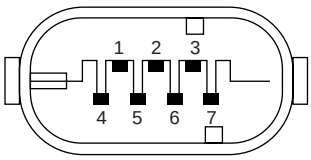

Further application possibilities
Using the standardized CAN-Bus, the steering-wheel angle information can be used for such systems as electronic stability program (ESP), navigation and electric power steering.
Details of mechanical connection variants, as well as of the electrical interface are available on request.

Block diagram.

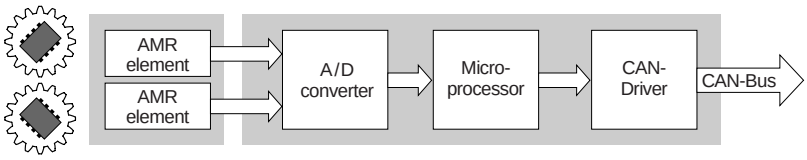

Throttle-valve angular-position sensor

Measurement of angles up to 88°

φ / R

- Potentiometic angular-position sensor with linear characteristic curve.
- Sturdy construction for extreme loading.
- Very compact.

Application
These sensors are used in automotive applications for measuring the angle of rotation of the throttle valve. Since these sensors are directly attached to the throttle-valve housing at the end of the throttle-shaft extension, they are subject to extremely hostile underhood operating conditions. To remain fully operational, they must be resistant to fuels, oils, saline fog, and industrial climate.

Design and function
The throttle-valve angular-position sensor is a potentiometric sensor with a linear characteristic curve. In electronic fuel injection (EFI) engines it generates a voltage ratio which is proportional to the throttle valve's angle of rotation. The sensor's rotor is attached to the throttle-valve shaft, and when the throttle valve moves, the sensor's special wipers move over their resistance tracks so that the throttle's angular position is transformed into a voltage ratio. The throttle-valve angular-position sensor's are not provided with return springs.

Design
The position sensor 0 280 122 001 has one linear characteristic curve.
The position sensor 0 280 122 201 has two linear characteristic curves.
This permits particularly good resolution in the angular range 0°...23°.

Explanation of symbols
U_A Output voltage
U_V Supply voltage
φ Angle of rotation
U_{A2} Output voltage, characteristic curve 2
U_{A3} Output voltage, characteristic curve 3

Accessories for 0 280 122 001	
Connector	**1 237 000 039**

Accessories for 0 280 122 201	
Plug housing	**1 284 485 118**
Receptacles, 5 per pack, Qty. required: 4	**1 284 477 121**
Protective cap, 5 per pack, Qty. required: 1	**1 280 703 023**

Characteristic curve 1.
A Internal stop, L Positional tolerance of the wiper when fitted, N Nominal characteristic curve, T Tolerance limit,
φ_W Electrically usable angular range.

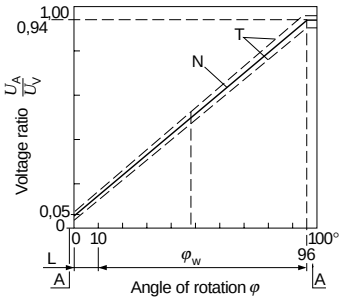

Characteristic curves 2 and 3.
A Internal stop,
φ_W Electrically usable angular range.

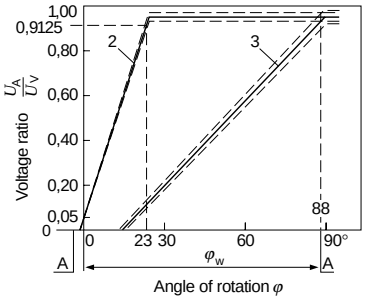

Technical data / Range

Part number		**0 280 122 001**	**0 280 122 201**
Diagram		1; 2	3
Useful electrical angular range	Degree	≤ 86	≤ 88
Useful mechanical angular range	Degree	≤ 86	≤ 92
Angle between the internal stops (must not be contacted when sensor installed)	Degree	≥ 95	–
Direction of rotation		Optional	Counterclockwise
Total resistance (Terms. 1–2)	kΩ	2 ±20 %	–
Wiper protective resistor (wiper in zero setting, Terms. 2–3)	Ω	710...1380	–
Operating voltage U_V	V	5	5
Electrical loading		Ohmic resistance	Ohmic resistance
Permissible wiper current	µA	≤ 18	≤ 20
Voltage ratio from stop to stop Chara. curve 1		$0.04 \le U_A/U_V \le 0.96$	–
Voltage ratio in area 0...88 °C Chara. curve 2		–	$0.05 \le U_{A2}/U_V \le 0.985$
Chara. curve 3		–	$0.05 \le U_{A3}/U_V \le 0.970$
Slope of the nominal characteristic curve	deg^{-1}	0.00927	–
Operating temperature	°C	–40...+130	–40...+85
Guide value for permissible vibration acceleration	$m \cdot s^{-2}$	≤ 700	≤ 300
Service life (operating cycles)	Mio	2	1.2

Dimension drawings.

A Plug-in connection,
B O-ring 14.65 x 2 mm,
C Fixing dimensions for throttle-valve housing, **D** Clockwise rotation [1]),
E Counterclockwise rotation [1]), **Ö** Direction of throttle-valve opening.
[1]) Throttle valve in idle setting.

F O-ring 16.5 x 2.5 mm, **G** 2 ribs, 2.5 mm thick,
H Plug-in connection, **I** Blade terminal,
K This mounting position is only permissible when the throttle-valve shaft is sealed against oil, gasoline, etc., **Ö** Direction of throttle-valve opening,
L Fixing dimensions for throttle-valve potentiometer.

0 280 122 001

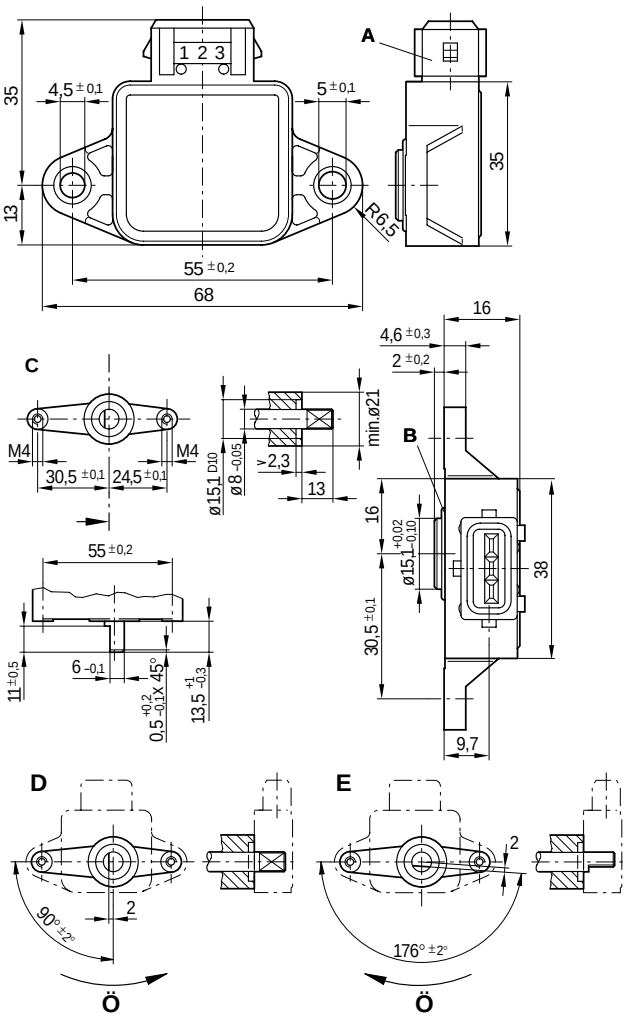

0 280 122 201

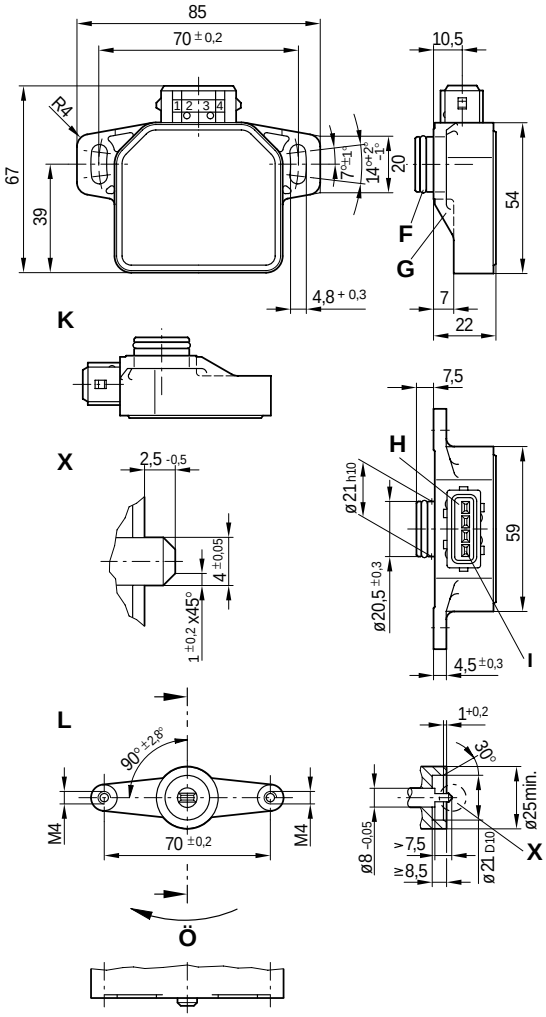

Diagram 1.

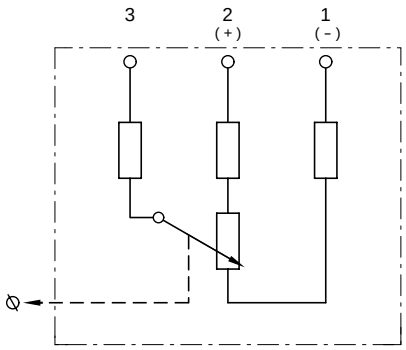

Diagram 2.

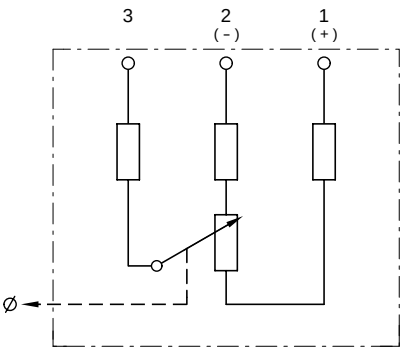

Diagram 3.
Throttle valve in idle setting.

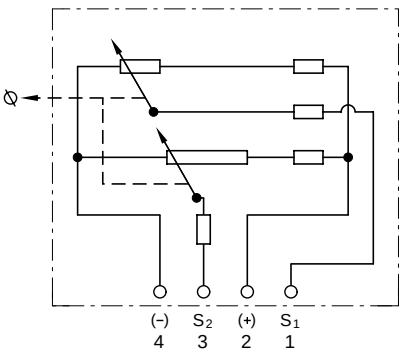

Yaw sensor (gyrometer)

with micromechanical acceleration sensor

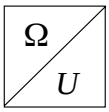

- Compact system design with highly integrated electronics.
- Insensitive to mechanical or electrical interference.
- Simultaneous measurement of yaw rate and acceleration vertical to the rotary axis.
- Extensive yaw-rate measuring range from 0.2...100 degrees per second (corresponds to 2...1,000 rotations per hour).
- Capacitive measuring concept.

Design
The complete unit is comprised of a yaw sensor and an acceleration sensor, together with evaluation electronics. These components are all mounted on a hybrid and hermetically sealed in a metal housing.

Application
This sensor is used in automotive engineering for the vehicle dynamics control (Electronic Stability Program, ESP) and measures the vehicle's rotation around its vertical axis, while at the same time measuring the acceleration at right angles to the driving direction. By electronically ervaluating the measured values, the sensor is able to differentiate between normal cornering and vehicle skidding movements.

Operating principle
Two oscillatory masses each have a conductor attached through which alternating current (AC) flows. Since both of the masses are located in a constant magnetic field, they are each subjected to an electrodynamic force which causes them to oscillate. If the masses are also subjected to a rotational movement, Coriolis forces are also generated. The resulting Coriolis acceleration is a measure for the yaw rate.The linear acceleration values are registered by a separate sensor element.

Installation information
– Installation near to the vehicle's center of gravity
– Max. reference-axis deviation transverse to the direction of movement ±3°
– Refer to sketch on Page 9
– Tightening torque for fastening screws: 6 +2/–1 Nm.

Explanation of symbols
Ω Yaw rate
g Acceleration due to gravity 9.8065 m · s^{-2}
a_q Linear (transverse) acceleration

Technical data / Range

Part number	**0 265 005 258**
Yaw sensor	DRS-MM1.0R
Maximum yaw rate $\Omega_{max.}$ about the rotary axis (Z-axis)	±100°/s
Minimum resolution $\Delta\Omega$	±0.2°/s
Sensitivity	18 mV/°/s
Change of sensitivity	≤ 5%
Offset yaw rate	2°/s [1])
Change of offset	≤ 4°/s
Non-linearity, max. deviation from best linear approximation	≤ 1% FSO
Ready time	≤ 1 s
Dynamic response	≥ 30 Hz
Electrical noise (measured with 100 Hz bandwidth)	≤ 5 mV_{rms}
Linear acceleration sensor	
Maximum acceleration a_{qmax}	±1.8 g
Sensitivity	1000 mV/g
Change of sensitivity	≤ 5%
Offset	0 g [1])
Change of offset	≤ 0,06 g
Non-linearity, max. deviation from best linear approximation	≤ 3% FSO
Ready time	≤ 1.0 s
Dynamic response	≥ 30 Hz
Electrical noise (measured with 100 Hz bandwidth)	≤ 5 mV_{rms}
General data	
Operating-temperature range	–30...+85 °C
Storage-temperature range	–20...+50 °C
Supply voltage	12 V nominal
Supply-voltage range	8.2...16 V
Current consumption at 12 V	< 70 mA
Reference voltage	2.5 V ±50 mV [1])

[1]) Zero point is 2.5 V (reference).

Accessories [2])

Plug housing	–	Qty. required: 1	AMP-No:	**1-967 616-1**
Contact pins	for 0.75 mm²	Qty. required: 6	AMP-No:	**965 907-1**
Gaskets	for Ø 1.4...1.9 mm²	Qty. required: 6	AMP-No:	**967 067-1**

[2]) To be obtained from AMP Deutschland GmbH, D-63225 Langen,
Tel. 0 61 03/7 09-0, Fax 0 61 03/7 09-12 23, E-Mail: AMP.Kontakt@tycoelectronics.com

Dimension drawings.

F Forward driving direction
S 6-pole plug
Ra Reference axis
Rf Reference surface
a_c Acceleration direction

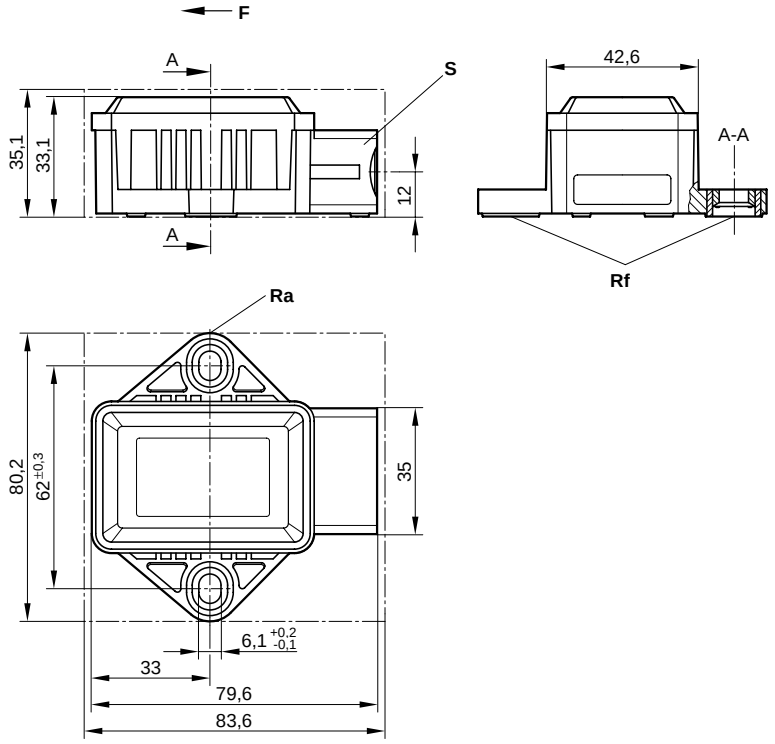

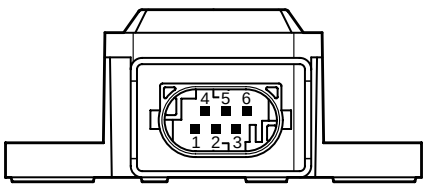

Connector-pin assignment

Pin 1	Reference
Pin 2	BITE
Pin 3	12 V
Pin 4	Out: Yaw-rate sensor
Pin 5	Out: Acceleration sensor
Pin 6	Ground

Operating principle.

$\vec{a_c}$ Coriolis acceleration
$\vec{V}$ Speed of oscillation
$\vec{\Omega}$ Angular velocity

$\vec{a_c} = \vec{2V} \times \vec{\Omega}$

Deviation of $\vec{\Omega}$-axis to reference surface ±3°

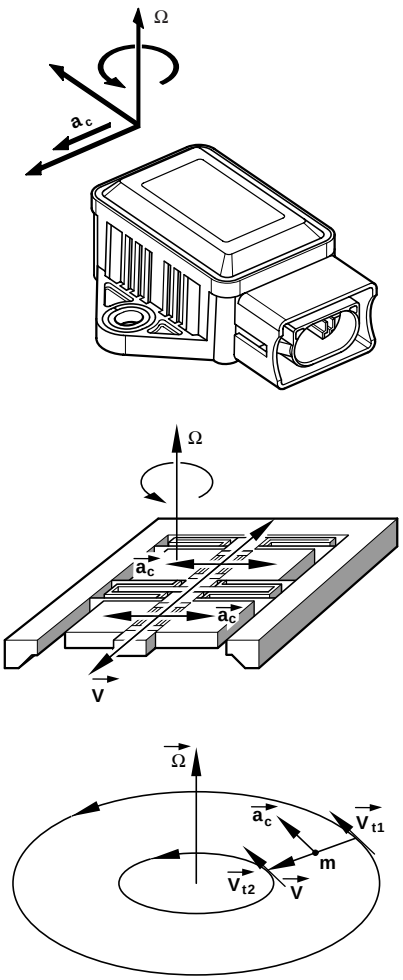

Block diagram.

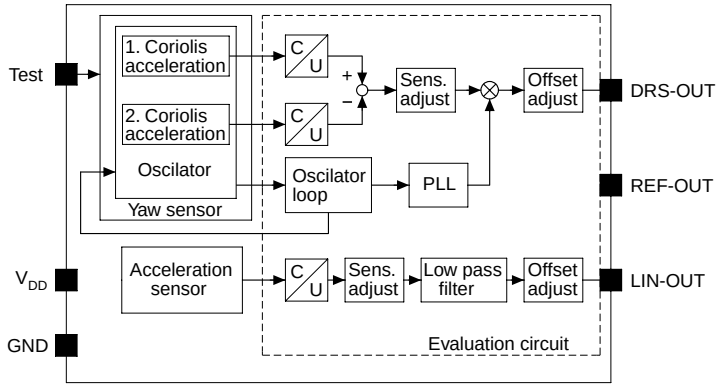

Characteristic curve.

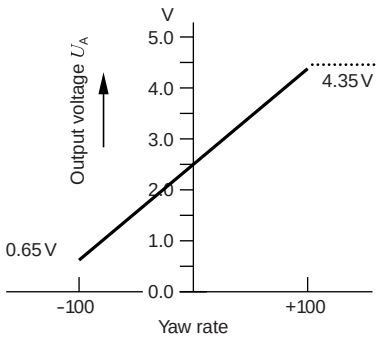

Inductive rotational-speed sensors

Incremental* measurement of angles and rotational speeds

- Non-contacting (proximity) and thus wear-free, rotational-speed measurement.
- Sturdy design for exacting demands.
- Powerful output signal.
- Measurement dependent on direction of rotation.

Application
Inductive rotational-speed sensors of this type are suitable for numerous applications involving the registration of rotational speeds. Depending on design, they measure engine speeds and wheel speeds for ABS systems, and convert these speeds into electric signals.

Design and function
The soft-iron core of the sensor is surrounded by a winding, and located directly opposite a rotating toothed pulse ring with only a narrow air gap separating the two. The soft-iron core is connected to a permanent magnet, the magnetic field of which extends into the ferromagnetic pulse ring and is influenced by it. A tooth located directly opposite the sensor concentrates the magnetic field and amplifies the magnetic flux in the coil, whereas the magnetic flux is attenuated by a tooth space. These two conditions constantly follow on from one another due to the pulse ring rotating with the wheel. Changes in magnetic flux are generated at the transitions between the tooth space and tooth (leading tooth edge) and at the transitions between tooth and tooth space (trailing tooth edge). In line with Faraday's Law, these changes in magnetic flux induce an AC voltage in the coil, the frequency of which is suitable for determining the rotational speed.

Wheel-speed sensor (principle).
1 Shielded cable, **2** Permanent magnet,
3 Sensor housing, **4** Housing block,
5 Soft-iron core, **6** Coil, **7** Air gap,
8 Toothed pulse ring with reference mark.

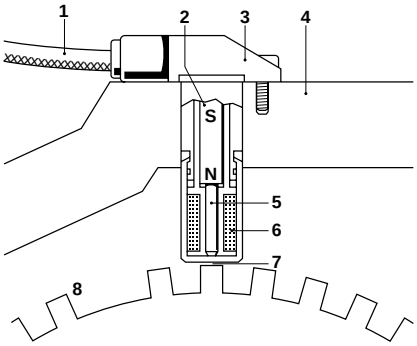

Diagram.
Connections:
1 Output voltage,
2 Ground, **3** Shield.

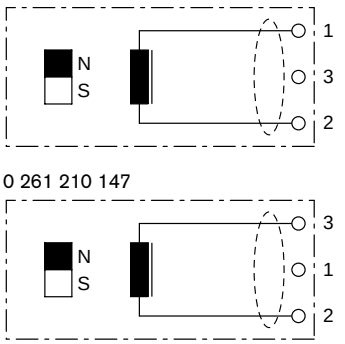

Range

Cable length with plug	Fig./ Dimension drawing	Order No.
360 ± 15	1	**0 261 210 104**
553 ± 10	2	**0 261 210 147**
450 ± 15	3	**0 281 002 214**

* A continuously changing variable is replaced by a frequency proportional to it.

Technical Data

Rotational-speed range n [1])	min^{-1}	≈ 20...7000
Permanent ambient temperature in the cable area		
For 0 261 210 104, 0 281 002 214	°C	–40...+120
For 0 261 210 147	°C	–40...+130
Permanent ambient temperature in the coil area	°C	–40...+150
Vibration stress max.	$m \cdot s^{-2}$	1200
Number of turns		4300 ±10
Winding resistance at 20 °C [2])	Ω	860 ±10 %
Inductance at 1 kHz	mH	370 ±15 %
Degree of protection		IP 67
Output voltage U_A [1])	V	0...200

[1]) Referred to the associated pulse ring.
[2]) Change factor k = 1+0.004 (ϑ_W –20 °C); ϑ_W winding temperature

Dimension drawings.

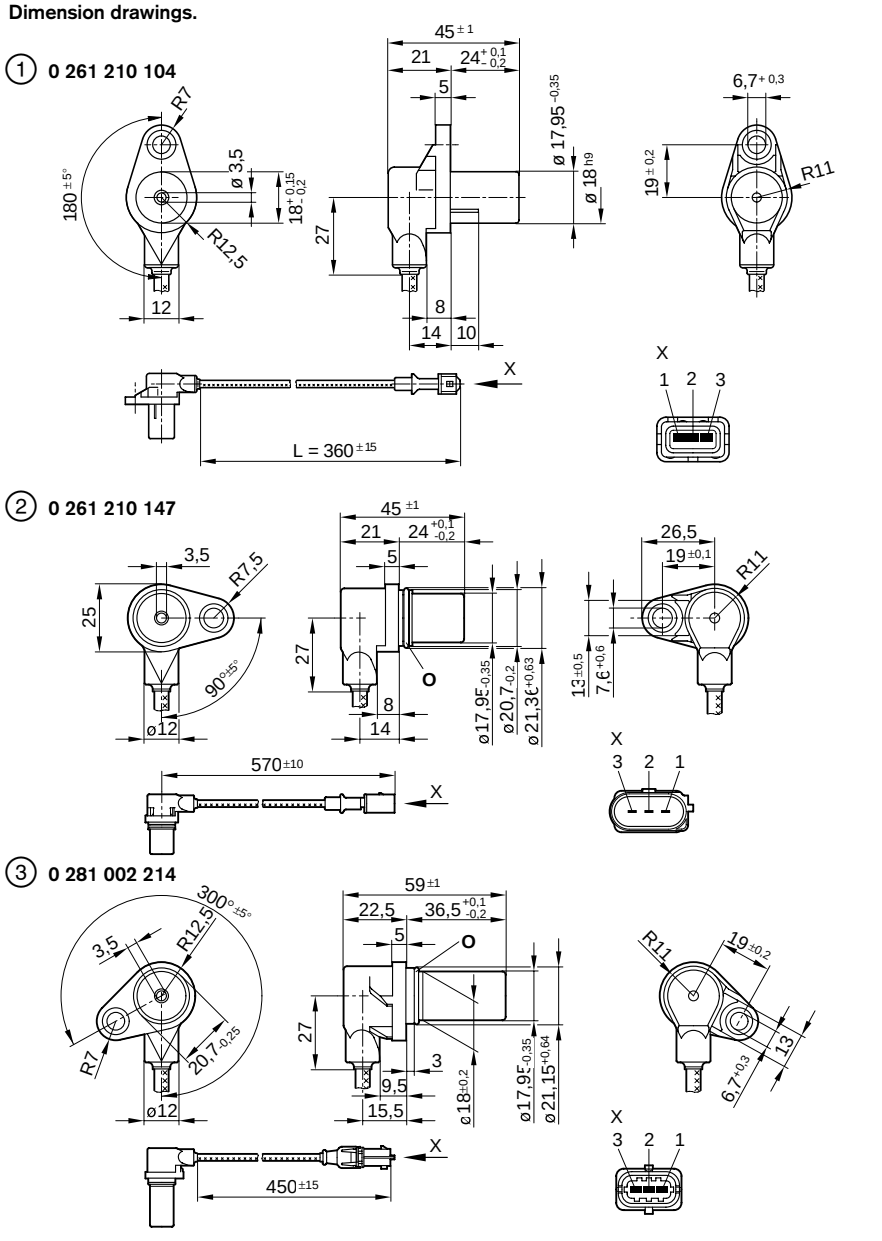

The sensor generates one output pulse per tooth. The pulse amplitude is a function of the air gap, together with the toothed ring's rotational speed, the shape of its teeth, and the materials used in its manufacture. Not only the output-signal amplitude increases with speed, but also its frequency. This means that a minimum rotational speed is required for reliable evaluation of even the smallest voltages.
A reference mark on the pulse ring in the form of a large "tooth space" makes it possible not only to perform rotational-speed measurement, but also to determine the pulse ring's position. Since the toothed pulse ring is an important component of the rotational-speed measuring system, exacting technical demands are made upon it to ensure that reliable, precise information is obtained. Pulse-ring specifications are available on request.

Explanation of symbols

U_A Output voltage
n Rotational speed
s Air gap

Accessories

For rot-speed sensor	From offer drawing	Plug part number
0 261 210 104	A 928 000 019	**1 928 402 412**
	A 928 000 012	**1 928 402 579**
0 261 210 147		Enquire at AMP
0 261 002 214	A 928 000 453	**1 928 402 966**

Hall-effect rotational-speed sensors

Digital measurement of rotational speeds

n, φ, s / U

- Precise and reliable digital measurement of rotational speed, angle, and distance travelled.
- Non-contacting (proximity) measurement.
- Hall-IC in sensor with open-collector output.
- Insensitive to dirt and contamination.
- Resistant to mineral-oil products (fuel, engine lubricant).

Design

Hall sensors comprise a semiconductor wafer with integrated driver circuits (e.g. Schmitt-Trigger) for signal conditioning, a transistor functioning as the output driver, and a permanent magnet. These are all hermetically sealed inside a plastic plug-type housing.

Application

Hall-effect rotational-speed sensors are used for the non-contacting (proximity), and therefore wear-free, measurement of rotational speeds, angles, and travelled distances. Compared to inductive-type sensors, they have an advantage in their output signal being independent of the rotational speed or relative speed of the rotating trigger-wheel vane. The position of the tooth is the decisive factor for the output signal.
Adaptation to almost every conceivable application requirement is possible by appropriate tooth design. In automotive engineering, Hall-effect sensors are used for information on the momentary wheel speed and wheel position as needed for braking and drive systems (ABS/TCS), for measuring the steering-wheel angle as required for the vehicle dynamics control system (Electronic Stability Program, ESP), and for cylinder identification.

Operating principle

Measurement is based upon the Hall effect which states that when a current is passed through a semiconductor wafer the so-called Hall voltage is generated at right angles to the direction of current. The magnitude of this voltage is proportional to the magnetic field through the semiconductor. Protective circuits, signal conditioning circuits, and output drivers are assembled directly on this semiconductor.
If a magnetically conductive tooth (e.g. of soft iron) is moved in front of the sensor, the magnetic field is influenced arbitrarily as a function of the trigger-wheel vane shape. In other words, the output signals are practically freely selectable.

Technical Data [1]) / Range

Part number		**0 232 103 021**	**0 232 103 022**
Minimum rotational speed of trigger wheel n_{min}		0 min^{-1}	10 min^{-1}
Maximum rotational-speed of trigger wheel $n_{max.}$		4000 min^{-1}	4500 min^{-1}
Minimum working air gap		0.1 mm	0.1 mm
Maximum working air gap		1.8 mm	1.5 mm
Supply voltage U_N		5 V	12 V
Supply-voltage range U_V		4.75...5.25 V [2])	4.5...24 V
Supply current I_V	Typical	5.5 mA	10 mA
Output current I_A		0...20 mA	0...20 mA
Output voltage U_A		0... U_V	0... U_V
Output saturation voltage U_S		≤ 0.5 V	≤ 0.5 V
Switching time t_f [3]) at $U_A = U_N$, I_A = 20 mA (ohmic load)		≤ 1 µs	≤ 1 µs
Switching time t_r [4]) at $U_A = U_N$, I_A = 20 mA (ohmic load)		≤ 15 µs	≤ 15 µs
Sustained temperature in the sensor and transition region		–40...+150 °C	–30...+130 °C [5])
Sustained temperature in the plug area		–40...+130 °C	–30...+120 °C [6])

[1]) At ambient temperature 23 ±5 °C. [2]) Maximum supply voltage for 1 hour: 16.5 V
[3]) Time from HIGH to LOW, measured between the connections (0) and (–) from 90% to 10%
[4]) Time from LOW to HIGH, measured between the connections (0) and (–) from 10% to 90%
[5]) Short-time –40...+150 °C permissible. [6]) Short-time –40...+130 °C permissible.

Accessories for connector

Plug housing	Contact pins	Individual gaskets	For cable cross section
1 928 403 110	**1 987 280 103**	**1 987 280 106**	0.5...1 mm^2
	1 987 280 105	**1 987 280 107**	1.5...2.5 mm^2

Note: For a 3-pin plug, 1 plug housing, 3 contact pins, and 3 individual gaskets are required.
For automotive applications, original AMP crimping tools must be used.

Installation information

– Standard installation conditions guarantee full sensor functioning.
– Route the connecting cables in parallel in order to prevent incoming interference.
– Protect the sensor against destruction by static discharge (CMOS components).
– The information on the right of this page must be observed in the design of the trigger wheel.

Symbol explanation

n_{min} = 0: Static operation possible.
n_{min} > 0: Only dynamic operation possible.
U_S: Max. output voltage at LOW with I_A: Output current = 20 mA.
I_V: Supply current for the Hall sensor.
t_f: Fall time (trailing signal edge).
t_r: Rise time (leading signal edge).

Trigger-wheel design

0 232 103 021
The trigger wheel must be designed as a 2-track wheel. The phase sensor must be installed dead center. Permissible center offset: ±0.5 mm.

Segment shape:	
Mean diameter	≥ 45 mm
Segment width	≥ 5 mm
Segment length	≥ 10 mm
Segment height	≥ 3.5 mm

0 232 103 022
The trigger wheel is scanned radially.

Segment shape:	
Diameter	≥ 30 mm
Tooth depth	≥ 4.5 mm
Tooth width	≥ 10 mm
Material thickness	≥ 3.5 mm

Dimension drawings.

S 3-pin plug-in connection
Sez Sensor area
Stz Plug area
Tz Temperature area
O O-ring

0 232 103 021

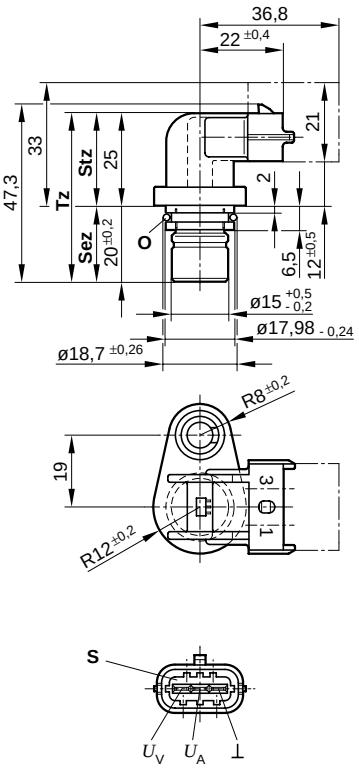

0 232 103 022

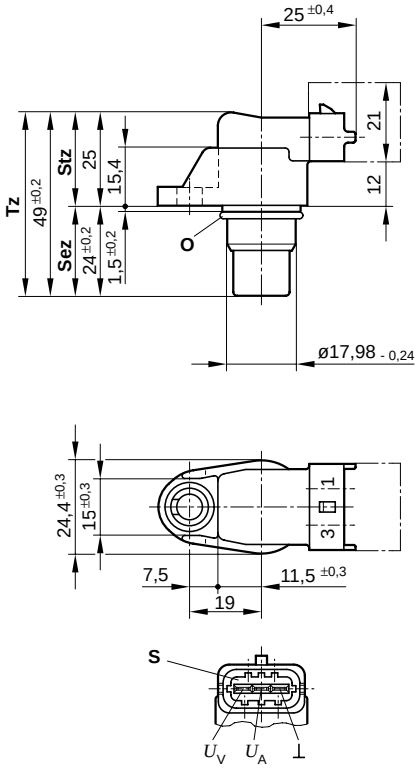

Installation stipulation 0 232 103 022.

Dr Direction of rotation
Ls Air gap
S Sharp-edged
Zh Tooth height

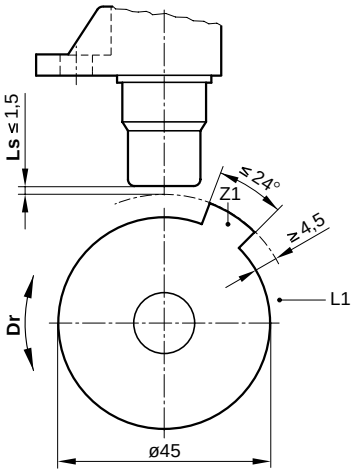

Test wheel

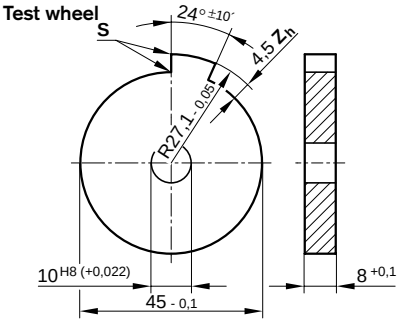

Block diagram.

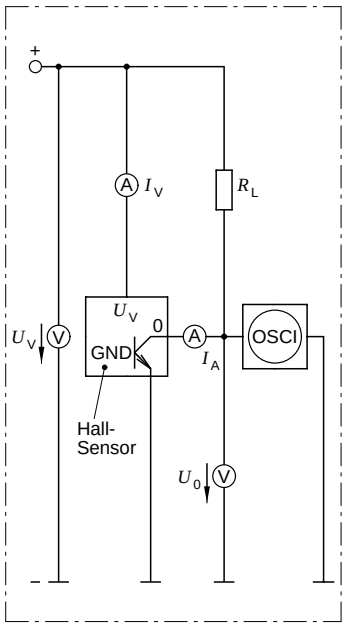

Output-signal shape.

$U_{A,O}$ Output voltage
$U_{A,SAT}$ Output saturation voltage
α Angle of rotation
α_S Signal width

0 232 103 021

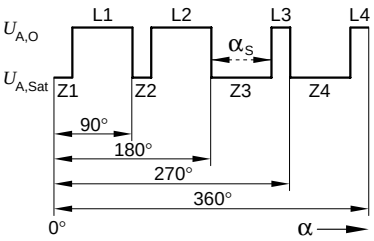

0 232 103 022

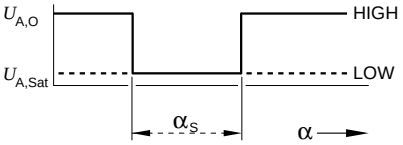

Installation stipulation 0 232 103 021.

Dr Direction of rotation

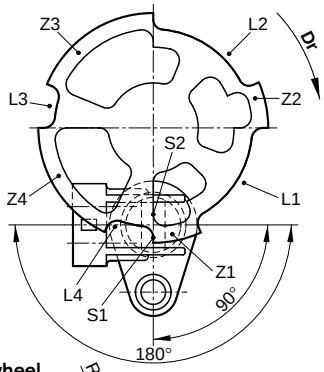

Test wheel

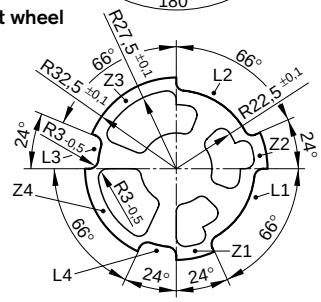

Acceleration sensor

Measurement of acceleration up to ±5 *g*

- Ratiometric output signal.
- Temperature-compensated.
- Low pyroelectric sensitivity.
- Hermetically sealed housing.
- High-level EMC.
- Overvoltage protection.
- Short-circuit proof.
- Protected against reverse polarity.

Applications
In automotive engineering, this sensor is used to rule out the chance of faulse diagnosis in the engine electronics.
It registers the vehicle accelerations which are the direct result of fluctuations in crankshaft speed. In order to ascertain whether these crankshaft-speed fluctuations result from ignition misfire or a poor road surface, the latest engine-management systems also register the ignition misfires of the individual cylinders.

Design and function
The sensor element comprises a "bending element" consisting of two anti-parallel polarized piezoelectric layers. If acceleration forces are applied to this bending element, mechanical tension is caused which in turn results in a charge of electricity at the bending-element surfaces. This charge is evaluated by a hybrid circuit.
The sensor can measure in the horizontal and in the vertical measurement directions when mounted appropriately, whereby the measurement direction is usually vertical to the clamping surface.
An output signal $U_A > U_0$ is generated for vertical upwards acceleration of the clamping surface, whereas the corresponding downward acceleration generates a signal $U_A < U_0$. The output voltage U_A has a cosine relationship to the angle between the sensor measurement direction and the direction of acceleration. Taking an angle of 15°, this produces a (calculated) signal reduction of 3.4%.

Characteristic curve.

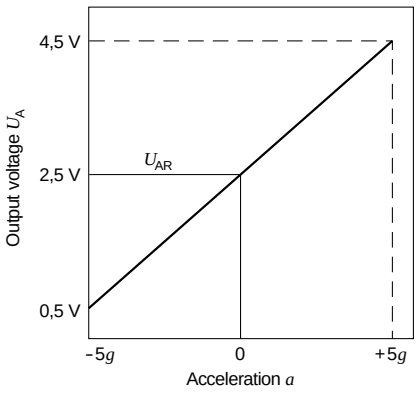

U_{AR} Open-circuit output voltage
$U_A = U_0 \pm U_D$
Output-voltage excursion for measuring range
$U_D = \pm 2$ V
Output voltage U_A
For acceleration > +5 *g* 4.5 V
For acceleration < –5 *g* 0.5 V

Technical Data / Range

Part number	**0 273 101 021**
Measuring range	±5 *g*
Limit of operating load	
Sustained operation in the sensor's dynamic core-frequency range without damage	±10 *g*
Overload protection	
Peak amplitude: 20 times without damage	100 *g*
Lateral sensitivity	< 10 %
Nominal sensitivity at *f* = 15.8 Hz	2 V / 5 *g*
Operating temperature range	–40...+105 °C
Storage-temperature range	–40...+95 °C
Service life (ageing)	
In operating temperature range –40...+105 °C	4000 h
Weight	75 g

Electrical specifications for U_v = 5 V ±3 %

Input current I_v	< 20 mA
Output-voltage zero point U_o	U_v / 2 = 2.5 V ±100 mV
Sensitivity	400 mV / *g* ±12 %
Dynamic output resistance R_{AO} in the range 0...100 Hz	< 300
Load resistance R_L (pullup above +5 V)	> 7.5 kΩ
Load capacity C_L	< 15 nF
Lower critical frequency f_u (–3 dB)	0 Hz < f_u < 5 Hz
Upper critical frequency f_o (–3 dB)	50 Hz < f_o < 100 Hz

Accessories

Connector	**1 237 000 039**

Dimension drawings.
M Direction of measurement.

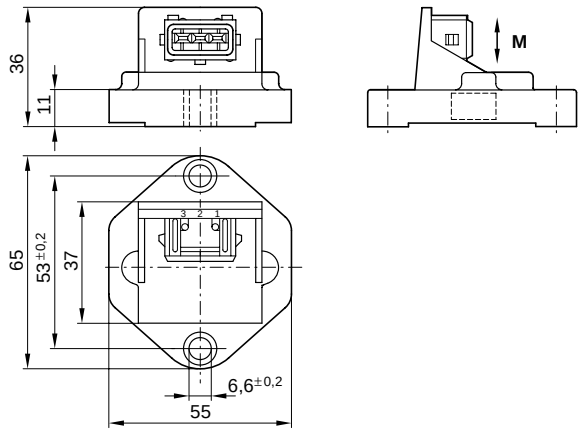

Installation instructions
The sensor must be securely screwed to the base. We recommend two M6 screws with collar or washer. Screw tightening torque: 2.5 N · m.

Explanation of symbols

U_A	Output voltage
U_0	Output-voltage zero point (ratiometric to U_V)
U_D	Dynamic portion of the output signal
U_V	Supply voltage
g	Acceleration due to gravity = 9.81 m · s^{-2}

Pin assignment

Pin 1	+5 V (U_V)
Pin 2	Ground
Pin 3	OUT

Sensor principle.
a Without effect of acceleration
b With effect of acceleration
1 Piezo-ceramic bending element "measuring beam"
2 Opposed-polarity layers

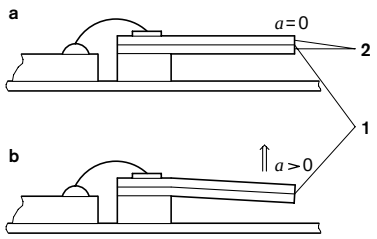

Pin assignment.

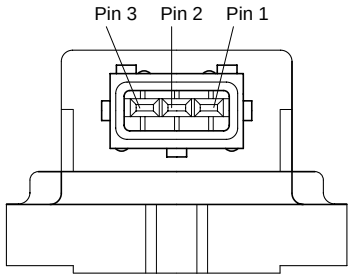

Block diagram.
P Piezo-ceramic element

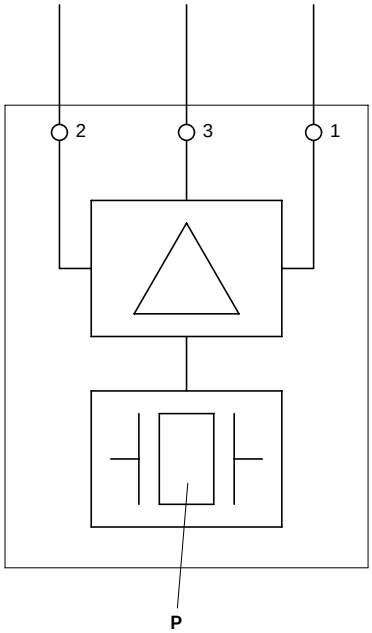

Piezoelectric acceleration sensors

Measurement of acceleration up to 35 *g*

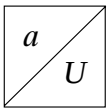

- Acceleration measurement using piezoelectric bending elements (bimorphous strips).
- Micromechanical acceleration sensor (please enquire).
- Low temperature-dependence.
- High sensitivity.
- Wide measuring range.

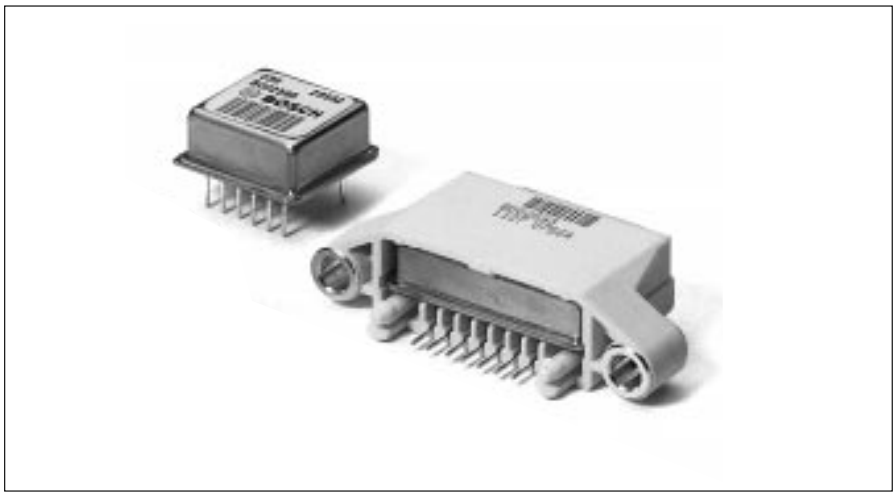

Range

Dual-channel sensor
With two identical, but independent, piezo-ceramic bending strips. These are connected so that the output voltages of each channel are phase-opposed.
Suitable for pcb mounting.

0 273 101 141

With two sensing directions offset to each other by 90°. Suitable for pcb mounting.

0 273 101 150

With one sensing direction only. In this direction, acceleration leads to a 180° phase shift of channel A, whereas the channel B phase shift is 0°.
Suitable for pcb mounting.

0 273 101 131

Applications
Used in automotive occupant-protection systems for triggering the airbag, the seat-belt tightener, the roll-over bar, or the seat-belt locking systems. Used for instance as the impact sensor for monitoring impact loads during transportation. Since the lower frequency limit is 0.9 Hz, this sensor can only be used to register acceleration changes.

Technical data / Range

Part number		0 273 101 141			0 273 101 150			0 273 101 131		
Block diagram		X			–			–		
		min.	typ.	max.	min.	typ.	max.	min.	typ.	max.
Measuring range at U_V = 5 V	g [1]	–35	–	+35	–35	–	+35	–35	–	+35
Frequency range (–3dB)	Hz	0.9	–	250	0.9	–	340	0.9	–	340
Supply voltage U_V	V	4.75	5.00	5.25	4.0	5.0	5.25	4.0	5.0	5.25
Supply current I_V	mA	–	–	12	–	–	15	–	–	15
Open-circuit voltage at zero acceleration	mV	–45	–	+45	U_V /2 ±60 mV			U_V /2 ±60 mV		
Calibrated sensitivity at room temperature	mV · g^{-1}	57.5	60	62.5	57.5	60	62.5	57.5	60	62.5
Calibrated sensitivity at operating temperature	%	–	–	4	–	–	–	–	–	–
Operating-temperature range	°C	–45	–	+95	–45	–	+95	–45	–	+95
Electrical output										
Current-carrying capacity	mA	0.9	–	–	–	–	–	–	–	–
Capacitive loadability	pF	1200	–	–	–	–	–	–	–	–
Pin assignment										
Pin 1		U_V = +5 V			Output B			Output B		
Pin 2		Output B			U_V = +5 V			U_V = +5 V		
Pin 3		U_V = +5 V			Data			Data		
Pin 4		Test input			Test input			Test input		
Pin 5		Ground			Output A			Output A		
Pin 6		Output A			Housing, ground			Housing, ground		
Pin 7		Housing, ground			–			–		

[1]) Acceleration due to gravity g = 9.81 m · s^{-2}.

Design and function
The heart of this acceleration sensor is a piezo-ceramic strip of polycrystalline sintered material. When electrically polarized, this material displays a piezoelectrical effect: That is, when pressure is applied, the mechanical loading results in charge separation, or a voltage which can then be picked-off by electrodes.
The piezo bending element comprises a bonded structure containing two inversely polarized piezo strips, the so-called bimorphous strips. These have electrodes, and are bonded to a center electrode. This configuration has the advantage that the pyroelectrical signals caused by temperature fluctuations compensate each other.

When subjected to acceleration, the piezo-ceramic bends by as much as 10^{-7} m.
For signal processing, the sensor is provided with a hybrid circuit which is comprised of an impedance converter, a filter, and an amplifier. These serve to define the sensitivity and effective frequency range. The filter removes the HF signal components.
The lower frequency limit of 0.6 Hz is defined by the piezo element itself. Using a supplementary test input, the sensor's electronic functions can be monitored as well as piezo-strip integrity.

Test signal
A fully operational sensor generates a positive output pulse when +5V are briefly applied across its test input. If there is an open-circuit in the signal path, this output pulse will be missing, and if the bimorphous strip is broken the signal will exceed +5V.
For the versions with two bimorphous strips, the output pulse must appear at each output.

Dimension drawings.

0 273 101 141

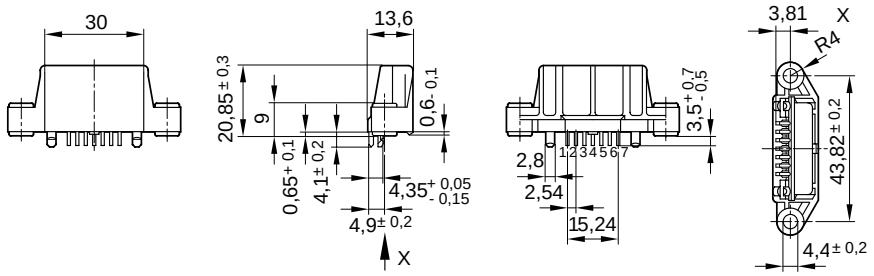

0 273 101 131/150

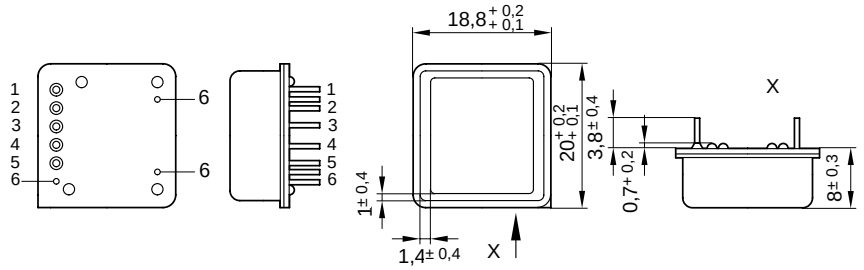

Block diagram of dual-channel sensor.

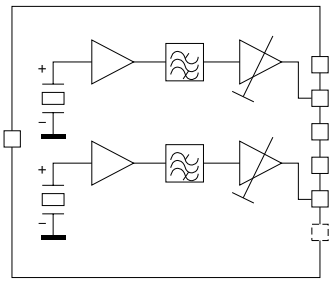

Installation instructions
The acceleration sensors must be installed so that the baseplate is either vertical or horizontal referred to the direction of acceleration or deceleration.

Installation position.
A, B, M Directions of measurement

Baseplate vertical referred to direction of measurement.
0 273 101 141
Deceleration in direction of measurement
Channel A output voltage

$U_{AA} < \frac{U_V}{2}$,

Channel B output voltage

$U_{AB} > \frac{U_V}{2}$.

Baseplate parallel to direction of measurement.
0 273 101 150
Acceleration in A direction
Channel A output voltage

$U_{AA} > \frac{U_V}{2}$.

Acceleration in B direction
Channel B output voltage

$U_{AB} > \frac{U_V}{2}$.

0 273 101 131
Acceleration in A direction
Channel A output voltage

$U_{AA} < \frac{U_V}{2}$,

Channel B output voltage

$U_{AB} > \frac{U_V}{2}$.

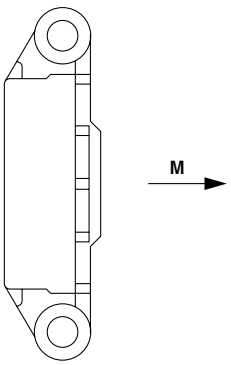

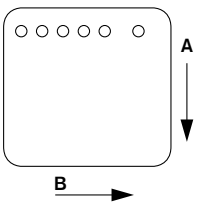

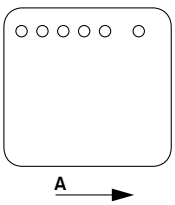

Surface-type micromechanical acceleration sensors

Measurement of accelerations of ±35 *g* or ±50 *g*

- Complete measuring range of ±35 *g* or ±50 *g*.
- Low number of external components required.
- Integrated self-diagnosis.
- Integrated offset calibration.
- Integrated 2nd-order Bessel filter.
- Ratiometric output signal.
- Standard SMD PLCC28 housing.
- Temperature range suitable for commercial-vehicle applications.

Applications
This acceleration sensor is used in vehicles as one of the components for the front airbag. Depending upon installation position in the passenger compartment, it can be used to measure longitudinal or transverse acceleration (referred to the vehicle's direction of travel).

Design and function
These acceleration sensors rely on a capacitive measuring principle.
Lateral sensing direction (in the component level).
Acceleration causes the seismic mass to deflect in the x-direction. This seismic mass is suspended on wave-shaped bending springs.
One electrode set is connected to the seismic mass (comb-like structure) and moves along with the particular acceleration.
These movable electrodes are designed as capacitor plates and are also provided with immovable counter-electrodes which are separated from each other by a narrow air gap. The application of a capacitive differential circuit with two capacitors results in a reduction of the non-linearity of the signal evaluation. Overload stops are provided as a protection against over-acceleration.
These prevent direct contact between the electrodes (combs). Mechanical sensitivity is defined by the geometrical shape of the springs.
Changes in C1 and C2 are registered and changed to a corresponding voltage by a capacity/voltage converter.

Range

Acceleration [1])	Sensing axis	Sensor type	Order No.
±35 *g*	X	SMB 050	**0 273 101 138**
	X/Y	SMB 060	**0 273 101 143**
	X/-X	SMB 065	**0 273 101 144**
±50 *g*	X	SMB 052	**0 273 101 155**
	X/Y	SMB 062	**0 273 101 154**
	X/-X	SMB 067	**0 273 101 157**

[1]) Measuring range for full-load deflection is guaranteed after setting the offset to VDD/2.

Sensing direction.

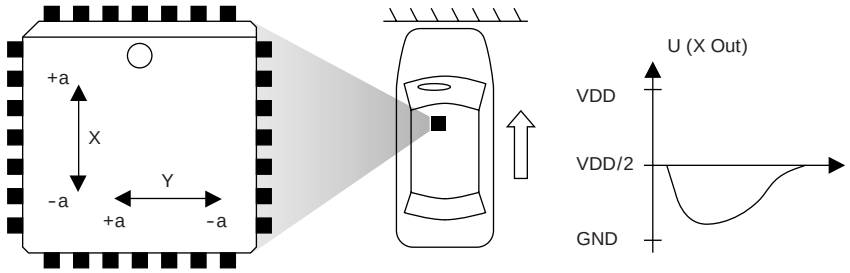

Design and function.

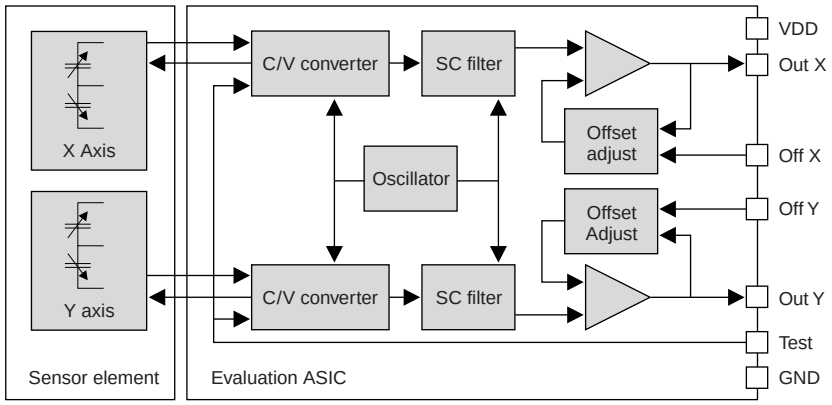

Technical Data

Limit values				
Parameter		min.	normal	max.
Supply voltage U_V	V	–0.3		6
Storage temperature	°C	–55		+105
Mechanical impact [1])				
Not energized	g			2000
Energized	g			1000
ESD (each pin)	kV	1.5		
Temperature gradient	K/min			20

Operating conditions				
Parameter		min.	normal	max.
Supply voltage U_V	V	4.75	5	5.25
Supply current I_V				
Single-channel unit	mA		6	7
Two-channel unit	mA		10	14
Operating temperature	°C	–40		+85

Measuring and function characteristics				
Parameter		min.	normal	max.
Sensitivity	mV/g		55	
	mV/g		38.5	
Sensitivity tolerance [2])	%		5	9
Non-linearity of the sensitivity	%		0.8	2
Transverse-axis sensitivity [3])	%			5
Zero-acceleration output			VDD/2	
Offset at zero acceleration				
After offset adjustment	mV			±150
Without offset adjustment	V			±Vdd/4
Offset-adjustment time	s			1.65
Offset/Test-voltage input (X/Y)				
Low	V			0.25 x VDD
High	V	0.75 x VDD		
Self-test				
±35g g type at 5 V	mV	250	385	866
±50g g type at 5 V	mV	200	336	610
Output-voltage range U_A				
I_{Out} = ±50 µA	V	0.25		VDD –0.25
Output current I_A	µA	±50		
Capacitive output load	pF			1000
3 dB corner frequency				
2nd order Bessel filter	Hz	320	400	480
Output noise [4])				
10 to 1000 Hz	mg/√Hz		2.5	4.5

[1]) The effects of excessive shock can permanently damage the unit. Maloperation of the sensor due to mechanical impact, and excessive g figures, are detected by on-chip self-test.
[2]) In percentage of nominal sensitivity, as a function of service life and temperature range.
[3]) Output signal resulting from acceleration in any axis vertical to the sensing axis.
[4]) Output noise with the offset adjustment out of operation. With offset adjustment in operation, the output noise is approx. double the figure.

Connector-pin assignment.

M marking pin 1

Pin	Order No. 1 273 101...		
	.. 138 .. 155	.. 143 .. 154	.. 144 .. 157
1-11	N.C. (*)	N.C. (*)	N.C. (*)
12	Offset X	Offset X	Offset X
13	Out X	Out X	Out X
14	Test	Test	Test
15	GND	GND	GND
16	VDD	VDD	VDD
17	N.C.	Offset Y	Offset X
18	N.C.	Out Y	Out X
19-28	N.C.	N.C.	N.C.

* Pin has no bond connection

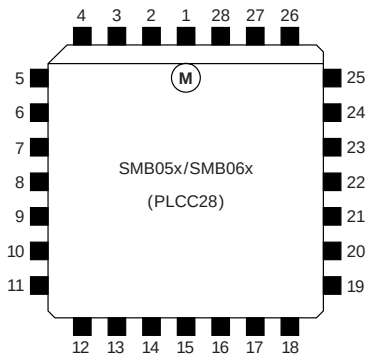

Operating principle.
1 Horizontal sprung seismic mass with springs, **2** Spring, **3** Fixed electrodes with capacitance C_1, **4** Al conductor, **5** Bond pad, **6** Fixed electrodes with capacity C_2, **7** Silicon oxide, **8** Torsion spring, **9** Vertical sprung seismic mass with electrodes. A Acceleration in sensing direction, C_M measuring capacity.

$$a \sim \frac{C_1 - C_2}{C_1 + C_2}$$

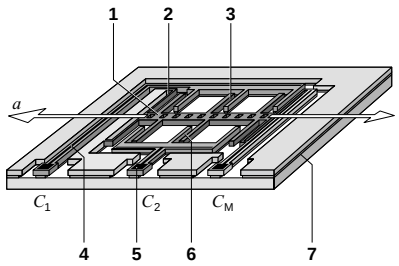

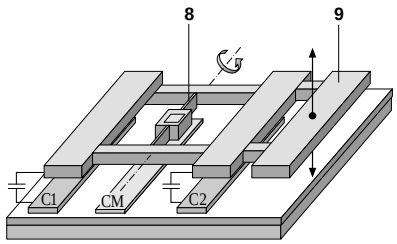

Explanation of symbols

a	Acceleration (g_n = 9.81 m/s²)
V_{out}	Output voltage
V_{DD}	Supply voltage
V_{off}	Offset voltage
S	Sensitivity

$$V_{out} = \frac{V_{DD}}{2} + (V_{off} + S \cdot a) \cdot \frac{V_{DD}}{5V}$$

Installation information
A deviation in the installation by ±1° from the horizontal results in a measuring error of 0.02 g. The sensor is protected against polarity reversal.

Piezoelectric vibration sensors

Measurement of structure-borne noise/acceleration

- Reliable detection of structure-borne noise for protecting machines and engines.
- Piezo-ceramic with high degree of measurement sensitivity.
- Sturdy compact design.

Applications
Vibration sensors of this type are suitable for the detection of structure-borne acoustic oscillations as can occur for example in case of irregular combustion in engines and on machines. Thanks to their ruggedness, these vibration sensors can be used even under the most severe operating conditions.

Areas of application
– Knock control for internal-combustion engines
– Protection of machine tools
– Detection of cavitation
– Monitoring of bearings
– Theft-deterrent systems

Design and function
On account of its inertia, a mass exerts compressive forces on a ring-shaped piezo-ceramic element in time with the oscillation which generates the excitation. Within the ceramic element, these forces result in charge transfer within the ceramic and a voltage is generated between the top and bottom of the ceramic element. This voltage is picked-off using contact discs – in many cases it is filtered and integrated – and made available as a measuring signal. In order to route the vibration directly into the sensor, vibration sensors are securely bolted to the object on which measurements take place.

Measurement sensitivity
Every vibration sensor has its own individual response characteristic which is closely linked to its measurement sensitivity. The measurement sensitivity is defined as the output voltage per unit of acceleration due to gravity (see characteristic curve). The production-related sensitivity scatter is acceptable for applications where the primary task is to record that vibration is occurring, and not so much to measure its severity.
The low voltages generated by the sensor can be evaluated using a high-impedance AC amplifier.

Technical data

Frequency range		1...20 kHz
Measuring range		≈ 0.1...400 g [1])
Sensitivity at 5 kHz		26 ±8 mV/g
Linearity between 5...15 kHz at resonances		+20/–10 % of 5 kHz-value (15...41 mV/g)
Dominant resonant frequency		> 25 kHz
Self-impedance		> 1 MΩ
Capacitance range		800...1400 pF
Temperature dependence of the sensitivity		≤ 0.06 mV/(g · °C)
Operating-temperature range:		
Type 0 261 231 118		–40...+150 °C
Type 0 261 231 148		–40...+150 °C
Type 0 261 231 153		–40...+130 °C
Permissible oscillations	Sustained	≤ 80 g
	Short-term	≤ 400 g

Installation

Fastening screw	Grey cast iron	M 8 x 25; quality 8.8
	Aluminum	M 8 x 30; quality 8.8
Tightening torque (oiled permitted)		20 ±5 N · m
Mounting position		Arbitrary

[1]) Acceleration due to gravity g = 9.81 m · s^{-2}.
Resistant to saline fog and industrial climate.

Range

Vibration sensor

2-pole without cable	**0 261 231 148**
2-pole, with cable, length 480 mm, up to +130 °C	**0 261 231 153**
3-pole, with cable, length 410 mm, up to +150 °C	**0 261 231 118**

Accessories

Sensor	Plug housing	Contact pins	Individual gasket	For cable cross section
0 261 231 148	**1 928 403 137**	**1 987 280 103**	**1 987 280 106**	0.5...1.0 mm²
		1 987 280 105	**1 987 280 107**	1.5...2.5 mm²
0 261 231 153	**1 928 403 826**	**1 928 498 060**	**1 928 300 599**	0.5...1.0 mm²
		1 928 498 061	**1 928 300 600**	1.5...2.5 mm²
0 261 231 118	**1 928 403 110**	**1 987 280 103**	**1 987 280 106**	0.5...1.0 mm²
		1 987 280 105	**1 987 280 107**	1.5...2.5 mm²

Note: A 3-pole plug requires 1 plug housing, 3 contact pins, and 3 individual gaskets.
In automotive applications, original AMP crimping tools must be used.

Vibration sensor (design).
1 Seismic mass with compressive forces F,
2 Housing, **3** Piezo-ceramic,
4 Screw, **5** Contact, **6** Electrical connection,
7 Machine block, **V** Vibration.

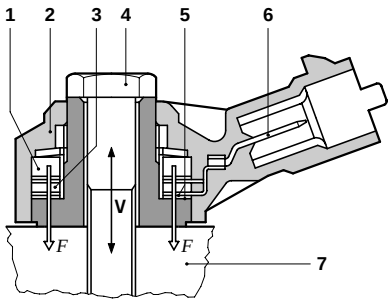

Response characteristic as a function of frequency.

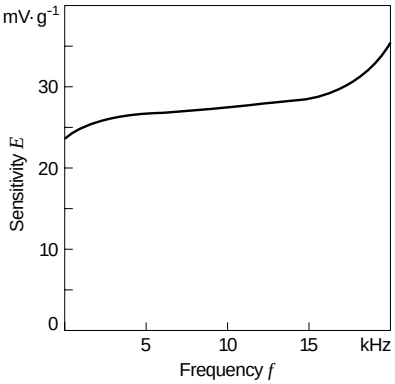

Mounting hole.

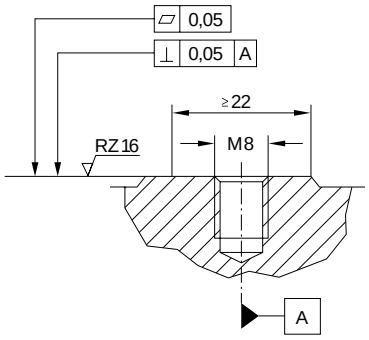

Dimension drawings.
a Contact surface.

0 261 231 148

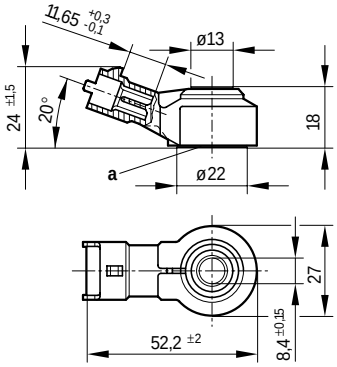

Part number	L mm
.. 118	410 ±10
.. 153	430 ±10

0 261 231 118

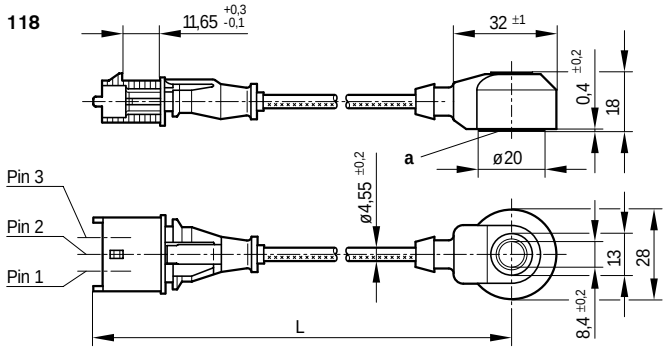

0 261 231 153

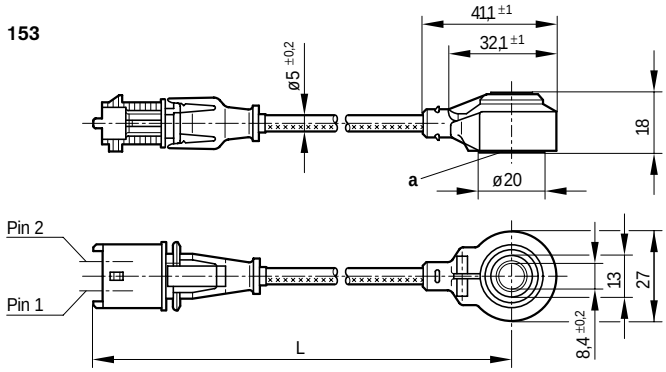

Evaluation
The sensor's signals can be evaluated using an electronic module.
This is described on Pages 26/27.

Installation instructions
The sensor's metal surfaces must make direct contact. No washers of any type are to be used when fastening the sensors. The mounting-hole contact surface should be of high quality to ensure low-resonance sensor coupling at the measuring point. The sensor cable is to be laid such that there is no possibility of sympathetic oscillations being generated. The sensor must not come into contact with liquids for longer periods.

Explanation of symbols

E	Sensitivity
f	Frequency
g	Acceleration due to gravity

Connector-pin assignments

Pin 1, 2	Measuring signal
Pin 3	Shield, dummy

Piezoelectric vibration sensors

Signal-evaluation module

- Choice of 4 selectable sensor inputs or 2 symmetrical inputs.
- Programmable amplification.
- Programmable bandpass filter.
- External calibration unnecessary.
- Integral programmable frequency divider.
- Analog stage with signal test.
- Suitable for a wide variety of microcomputers.
- PLCC28 housing.

Applications
Evaluation of the analog signals from piezoelectric sensors (vibration sensors).

Design and function
The analog signals are evaluated by a circuit integrated in the module. The circuit contains a programmable amplifier, a bandpass filter, a rectifier, an integrator, and control logic circuitry. The use of "SC" circuit engineering ensures that operation remains insensitive to interference, and that there is no necessity for external calibration. It is an easy matter to use this fully programmable circuit for a variety of applications.
The start and end of the integration are controlled through the "measuring window" input. For a variety of different pulse frequencies applied from outside (8 steps of 1...16 MHz), a frequency divider which is programmed through 3 inputs, generates the system clock for the analog stage, and the test frequencies (9 mid-frequencies from 5...16 kHz) depending upon the setting of the filter. The internal pulse frequency can be changed from nominal 100 kHz to values between 50 kHz and 150 kHz by changing the quartz frequency. At the same time, a shift of the band-filter mid-frequencies, the test frequencies, and the integration time constants also takes place.

Note
Due to its having MOS inputs, this module is to be handled very carefully. It is not to be touched directly and a MOS workstation is to be used. Operating-voltage switch-on is only to take place with a voltage gradient < 1 V · μs⁻¹.

Technical data / Range

Part number				**0 272 230 424**	
			Condition	min.	max.
Supply voltage	U_V	V	–	4.75	5.25
Supply current	I_V	mA	$U_V/2$	–	30
Input voltage, Analog	U_{KE}	V	–	0	2
Input current, Analog	I_{KE}	μA	U_{KE} = 2 V	–	10
Signal amplification	V		–	2	128
Signal amplification, Tolerance	d_V	%	–	–3	+3
Clock frequency	f_x	MHz	–	0,5	27
Input-signal frequency	f_{KE}	kHz	–	–	30
Bandpass-filter mid-frequency	f_M	kHz	–	5	16
Filter quality	Q		–	3	–
Filter quality, tolerance	d_Q		–	–0.5	+0.3
Integrator voltage excursion, effective	d_{VKU}	V	–	3.8	+4.5
Integrator offset			t_{MF} = 10 ms		
		mV	> 0 °C	–300	+300
		mV	≤ 0 °C	–400	+400
Integrator time constant	t_I	μs	–	148	152
Integrator output impedance	Z_{KL}	kΩ	–	–	2
Operating temperature	ϑ	°C	–	–40	+125

Limit values

				min.	typ.	max.
Max. supply voltage		V	–	–0.5	–	6.7
Max. rate of rise of the supply voltage		μs	–	–	1	–
Max. current in all inputs and outputs		mA	–	–2.5	–	+2.5
Protection of the inputs and outputs against destruction due to electrostatic charge		kV	–	–2	–	2
Storage temperature		°C	–	–55	–	+135
Ambient temperature during operation		°C	–	–40	–	+125

Dimension drawings.
M Marking for pin 1

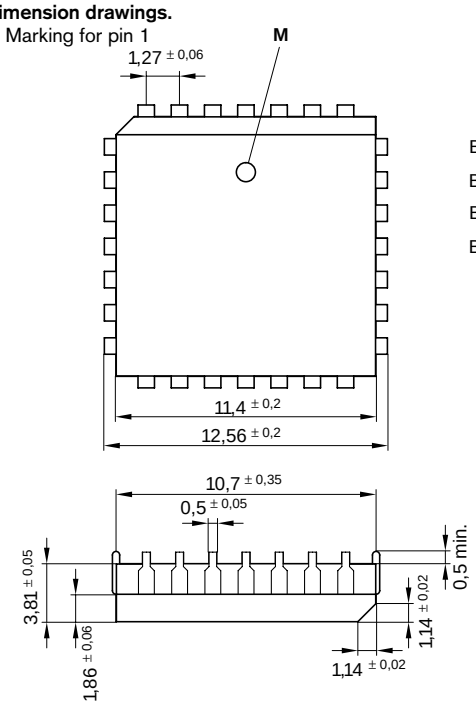

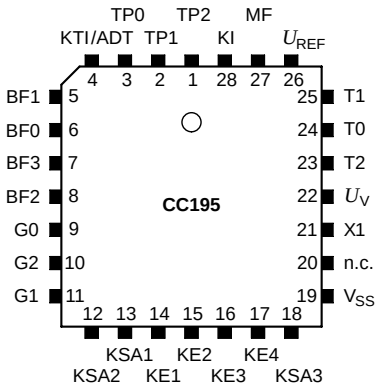

Connector-pin assignment.
U_{REF} Reference voltage
$U_V/2$ (Output loadable with ±0.5 mA)
U_V Supply voltage 5 V
V_{SS} Ground
BF0/BF1/BF2/BF3*) Setting of the bandpass mid-frequency
G0/G1/G2*) Setting of the amplification factor
KE1/2/3/4 Sensor inputs
KI Signal-integral output
KSA1/2/3*) Sensor selection
KTI/ADT Controlled input/test output
MF*) Measuring window
N.C. Not connected
T0/T1/T2 Clock-frequency selection
TP0/TP1/TP2 For test purposes
X1 Clock input

*) TTL-compatible inputs from the microcomputer port driver

Design and function.
F Frequency divider, **G** Rectifier, **L** Filter, I Integrator, **O** Oscillator, **P** Multiplexer, R Reference signals, **S** Sensor inputs, **T** Test-pulse divider, **V** Amplifier, **OUT** Output.

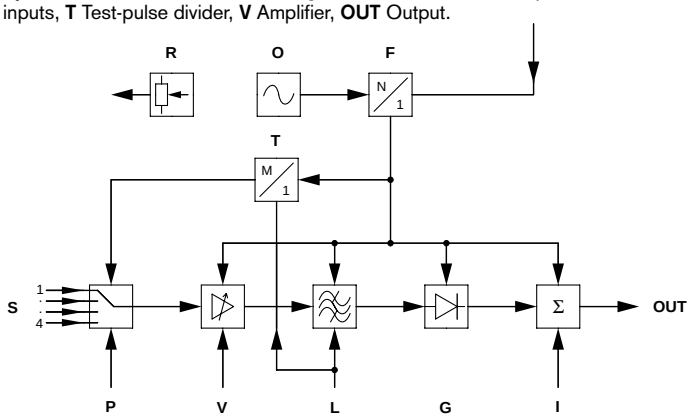

Application circuit (Example).
K Signal-integral output, **P** From microcomputer port driver, **S** Sensors, **T** Quartz clock, C_1/C_2 Capacitors as near as possible to housing pins.

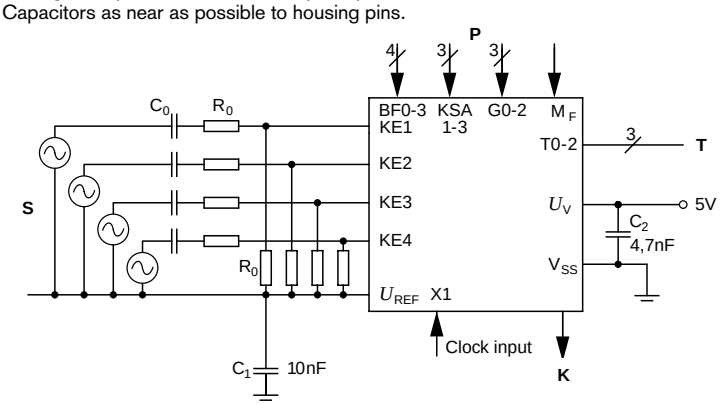

Micromechanical differential-pressure sensors Hybrid design

Measurement of pressure in gases from –100 kPa to 5 kPa

- High accuracy.
- EMC protection better than 100 V m^{-1}.
- Temperature-compensated.

Applications
On internal-combustion engines, this sensor is used to measure the differential pressure between the intake-manifold pressure of the drawn-in air and a reference pressure which is inputted through a hose.

Design and function
The piezoresistive pressure-sensor element and suitable electronic circuitry for signal amplification and temperature compensation are mounted on a silicon chip. The measured pressure is applied to the rear side of the silicon diaphragm. The reference pressure is applied from above to the diaphragm's active surface. Thanks to a special coating, both sides of the diaphragm are insensitive to the gases and liquids which are present in the intake manifold.

Installation information
The sensor is designed for mounting on a horizontal surface of the vehicle's intake manifold. The pressure fitting extends into the manifold and is sealed-off to atmosphere by an O-ring. Care must be taken, by ensuring appropriate mounting, that condensate does not form in the pressure cell or in the reference opening. Generally speaking, installation is to be such that liquids cannot accumulate in either the sensor or the pressure hose. Water in the sensor leads to malfunctions when it freezes.

Range

Pressure range kPa (p_1...p_2)	Order No.
–80...5	**B 261 260 314** [1])
–100...0	**B 261 260 318** [1])

[1]) Provisional draft number, order number available upon enquiry. Deliverable as from about the end of 2001.

Technical data

			min.	typ.	max.
Pressure-measuring range	p_e	kPa	–100	–	0
Operating temperature	ϑ_B	°C	–40	–	+130
Supply voltage	U_V	V	4.5	5.0	5.5
Current consumption at U_V = 5 V	I_V	mA	6.0	9.0	12.5
Load current at output	I_L	mA	–1.0	–	0.1
Load resistance to U_V or ground	$R_{pull\text{-}up}$	kΩ	5	680	–
	$R_{pull\text{-}down}$	kΩ	50.0	100	–
Response time	$t_{10/90}$	ms	–	1.0	–
Voltage limitation at U_V = 5 V					
Lower limit	$U_{A\,min}$	V	0.25	0.3	0.35
Upper limit	$U_{A\,max}$	V	4.75	4.8	4.85

Limit data

Supply voltage	$U_{V\,max}$	V	–	–	+16
Pressure	p_e	kPa	–500	–	+500
Storage temperature	ϑ_L	°C	–40	–	+130

Accessories

Plug housing	Qty. required: 1	**1 928 403 966**
Contact pins	Qty. required: 3	**1 928 498 060**
Individual gaskets	Qty. required: 3	**1 928 300 599**

Characteristic curve.

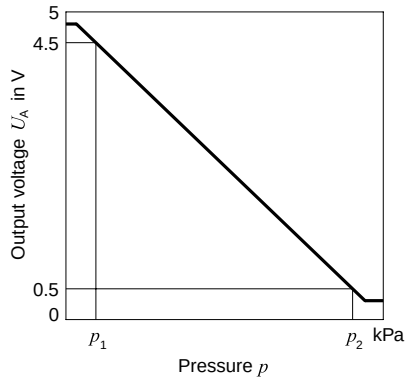

Characteristic-curve tolerance.

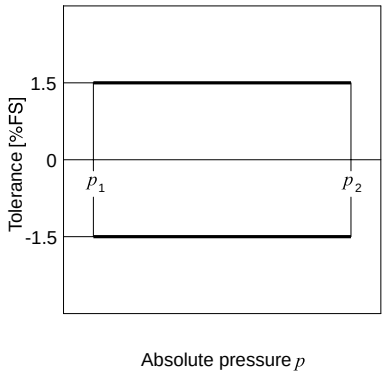

Tolerance-extension factor.

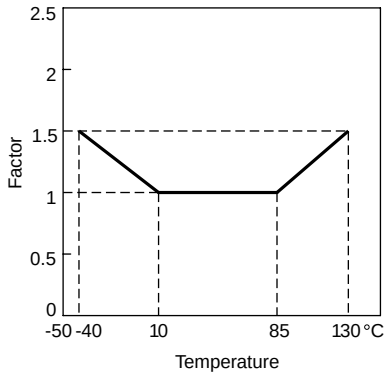

Section drawing (overall system).
1 Sensor cell, **2** Measured pressure, **3** Reference pressure

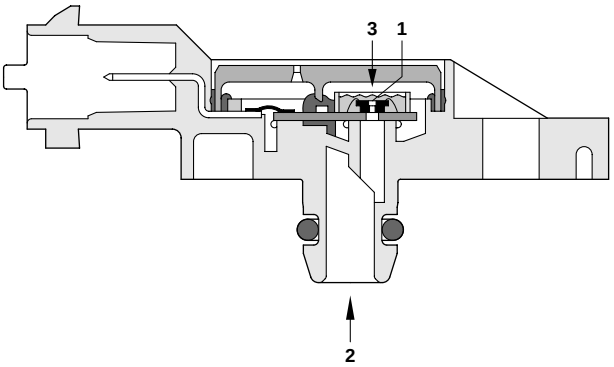

Dimension drawings.
Pin assignment
Pin 1 +5 V
Pin 2 Ground
Pin 3 Output signal

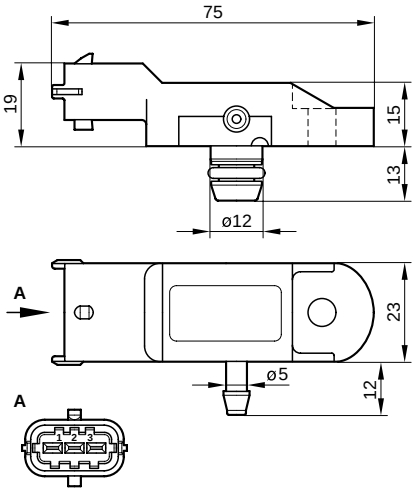

Signal evaluation: Recommendation.
D Pressure signal, **R** Reference

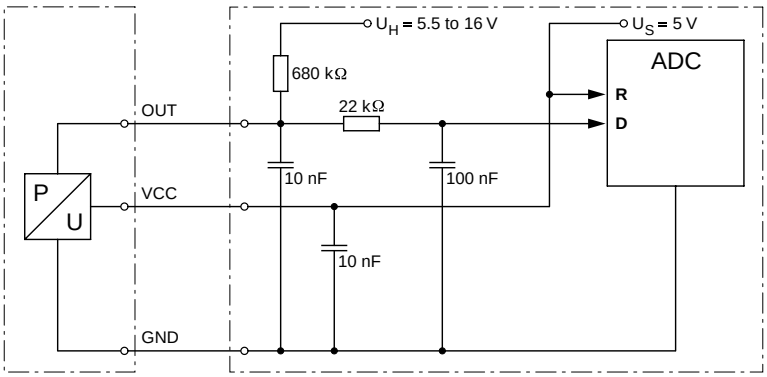

Signal evaluation: Recommendation
The pressure sensor's electrical output is so designed that malfunctions caused by cable open-circuits or short circuits can be detected by a suitable circuit in the following electronic circuitry. The diagnosis areas situated outside the characteristic-curve limits are provided for fault diagnosis. The circuit diagram shows an example for detection of all malfunctions via signal outside the characteristic-curve limitation.

Differential-pressure sensors

Measurement of pressures in gases and liquid mediums from –2.5 kPa to +3.75 kPa

p / U

- Resistant to the monitored medium.
- Piezoresistive sensor element.
- Integrated protection against humidity.

Application
In automotive applications, this type of pressure sensor is used for measuring fuel-tank pressure. In the process, a differential pressure is established referred to the ambient pressure.

Design and function
A micromechanical pressure element with diaphragm and connector fitting is the most important component in this differential-pressure sensor.
The diaphragm is resistant to the effects of the monitored medium. The measurement is carried out by routing the monitored medium through the pressure connector and applying the prevailing pressure to the piezoresistive sensor element. This sensor element is integrated on a silicon chip together with electronic circuitry for signal amplification and temperature compensation. The silicon chip is surrounded by a TO-type housing which forms the inner sensor cell. The surrounding pressure is applied to the active surface through an opening in the cap and a reference fitting. The active surface is protected against moisture by Silicagel. The pressure sensor generates an analog signal which is ratiometric referred to the supply voltage.

Installation instructions
The sensor is designed for horizontal mounting on a horizontal surface.
In case of non-horizontal mounting, each case must be considered individually. Generally speaking, installation is to be such that liquids cannot accumulate in the sensor or in the pressure hose. Water in the sensor leads to malfunctions when it freezes.

Range

Pressure range kPa (p_1...p_2)	Characteristics	Dimension drawing	Part No.
–2.50...2.50	–	①	**0 261 230 015**
–2.50...2.50	with protective cover	②	**0 261 230 026**
–3.75...1.25	–	①	**B 261 260 317** [1])

Technical data

			min	typ	max
Pressure-measuring range	p_e	kPa	–2.5	–	+2.5
Operating temperature	ϑ_B	°C	–40	–	+80
Supply voltage U_V	U_V	V	4.75	5.0	5.25
Input current at U_V = 5 V	I_V	mA	–	9.0	12.5
Load current at output	I_L	mA	–0.1	–	+0.1
Load resistance to ground or U_V	R_L	kΩ	50	–	–
Response time	$t_{10/90}$	ms	–	0.2	–
Voltage limitation at U_V = 5 V					
Lower limit	$U_{A\,min}$	V	0.25	0.3	0.35
Upper limit	$U_{A\,max}$	V	4.75	4.8	4.85
Recommendation for signal evaluation					
Load resistance to U_H = 5.5...16 V	$R_{L,H}$	kΩ	–	680	–
Limit data					
Supply voltage (1 min)	U_{Vmax}	V	–	–	16
Pressure measurement	$P_{e,\,max}$	KPa	–30	–	+30
Storage temperature	ϑ_L	°C	–40	–	+80

Accessories

Plug housing	Qty. required: 1	**1 928 403 110**
Contact pins	Qty. required: 3 [3])	AMP-Nummer **929 939-3** [2])
Contact pins	Qty. required: 3 [4])	AMP-Nummer **2-929 939-1** [2])
Individual gaskets	Qty. required: 3	AMP-Nummer **828 904** [2])

[1]) Provisional draft number, Order No. available upon request. Available as from the end of 2001.
[2]) To be obtained from AMP Deutschland GmbH, Amperestr. 7–11, D-63225 Langen, Tel. 0 61 03/7 09-0, Fax 0 61 03/7 09 12 23, E-Mail: AMP.Kontakt@tycoelectronics.com
[3]) Contacts for 0 261 230 026
[4]) Contacts for 0 261 230 015, B 261 260 317

Characteristic-curve.

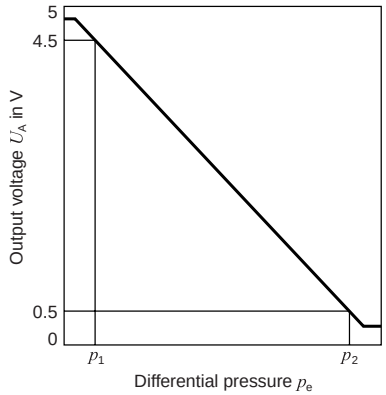

Characteristic-curve tolerance.

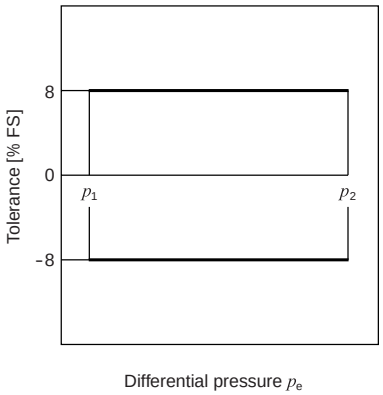

Temperature-error multiplier.
D After endurance test
N In as-new state

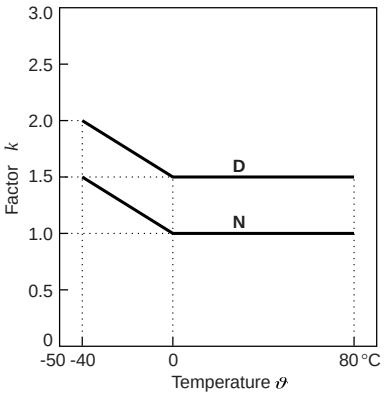

Dimension drawings.
S 3-pole plug

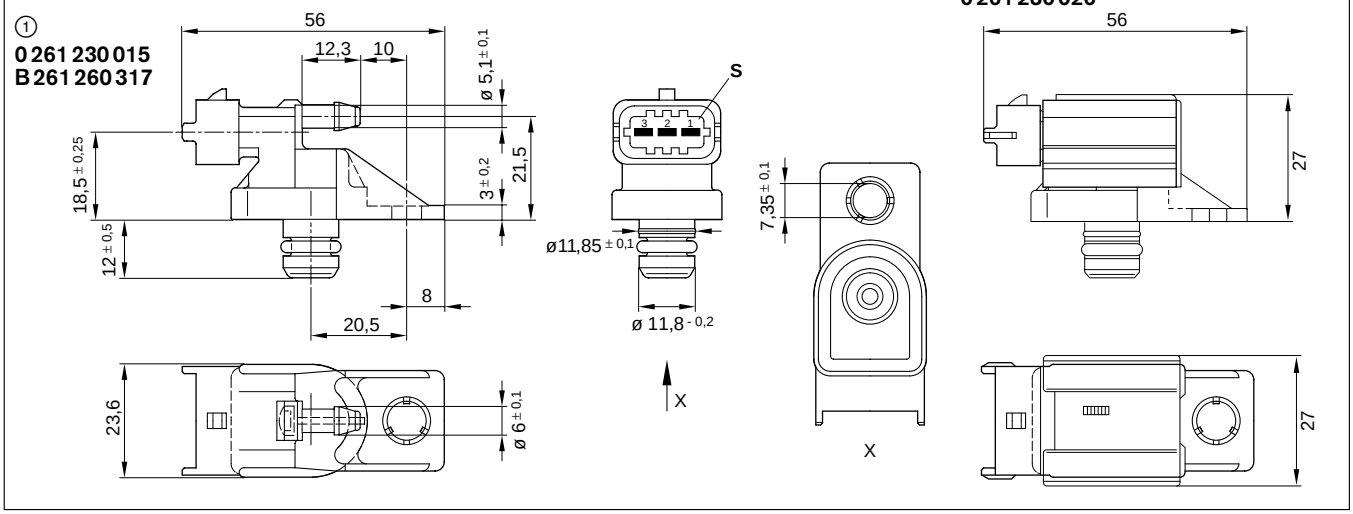

Sectional drawing of pressure sensor
(overall system).
1 Sensor cell, **2** Applied pressure,
3 Reference pressure.

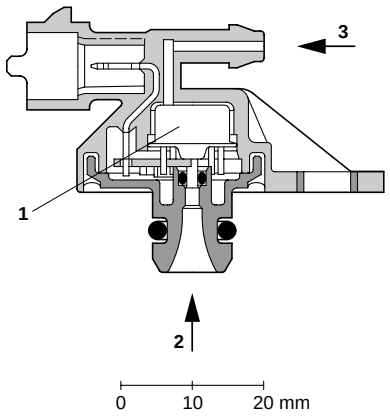

Sectional drawing of sensor cell.
1 Silicagel, **2** Applied pressure, **3** Reference pressure, **4** Sensor chip, **5** Glass base.

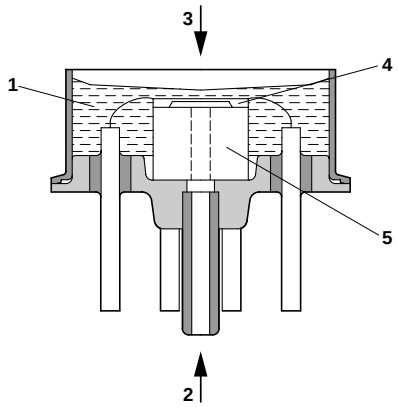

Explanation of symbols

p_e	Differential pressure
U_A	Output voltage (signal voltage)
U_V	Supply voltage
k	Tolerance multiplier
D	Following endurance test
N	As-new state

Connector-pin assignment

Pin 1	+5 V (U_V)
Pin 2	Ground
Pin 3	Output signal

Absolute-pressure sensor for measuring atmospheric pressure

Measurement of temperatures from 60 kPa to 115 kPa

- SMD assembly.
- Low-profile micromechanics.
- Temperature-compensation.
- Integral signal amplification.

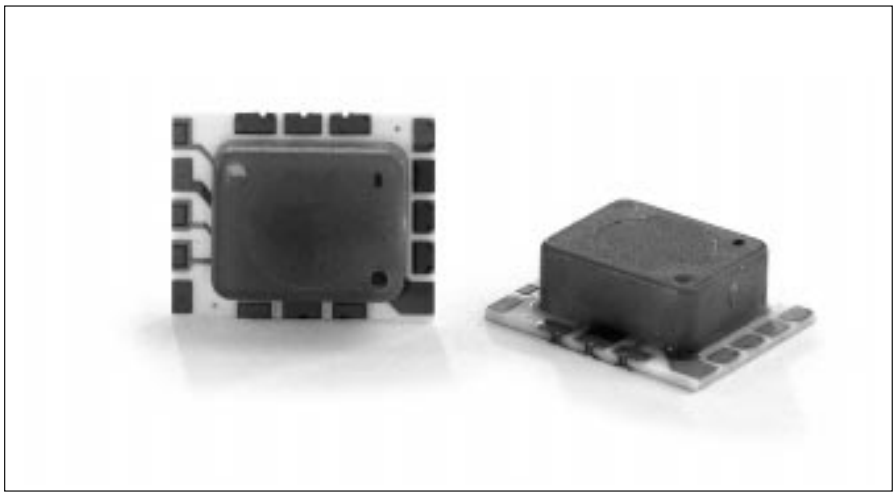

Design and function
This sensor comprises a temperature-compensated measuring element for determining the barometric absolute pressure. In this monolithic integrated silicon pressure sensor, the sensor element, and the respective evaluation circuitry with calibration elements are all united on a single silicon chip. The silicon chip is glued onto a hybrid substrate to facilitate automatic SMD assembly.

Explanation of symbols
U_V Supply voltage
U_A Output voltage (signal voltage)
k Temperature-error multiplier
ϑ Temperature
p_{abs} Absolute pressure
D Following endurance test
N Nominal status

Characteristic curves.

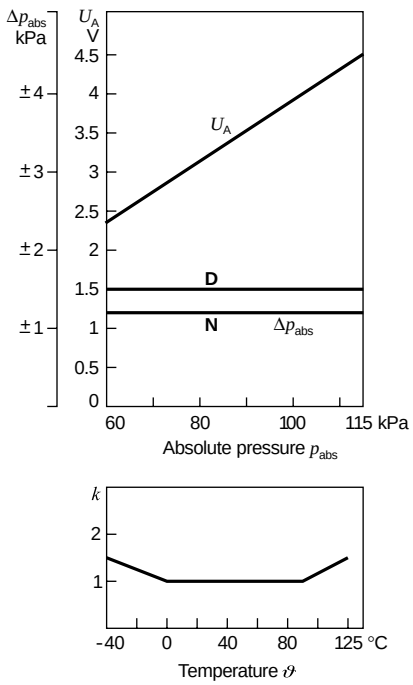

Block diagram.
E sensitivity, **O** Offset, **K** Compensation circuit, **S** Sensor bridge, **V** Amplifier.

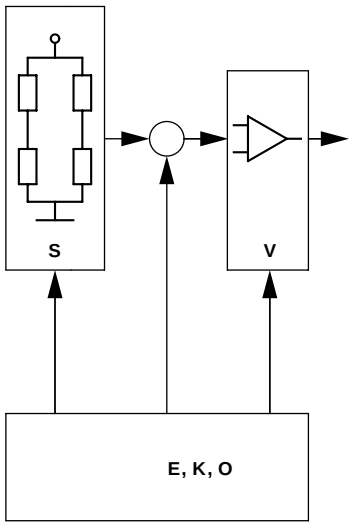

Technical data / Range

Part number			0 273 300 030		
			min.	typ.	max.
Pressure-measuring range	p_{abs}	kPa	60	–	115
Operating temperature range	ϑ_B	°C	–40	–	+125
Supply voltage	U_V	V	4.75	5.0	5.25
Supply current at U_V = 5 V	I_V	mA	6.0	9.0	12.5
Load current at output	I_L	mA	–1.0	–	0.5
Signal voltage	U_A	V	2.37	–	4.54
Voltage limitation at U_V = 5 V					
Lower limit	$U_{A\,min}$	V	0.25	0.3	0.35
Upper limit	$U_{A\,max}$	V	4.75	4.8	4.85
Response time	$t_{10/90}$	ms	–	–	1
Load capacity	C_L	nF	–	–	12

Signal evaluation: Recommendation

Load resistance to U_V or ground	$R_{pull\text{-}up}$	kΩ	5	680	
	$R_{pull\text{-}down}$	kΩ	10.0	100	

Limit data

Supply voltage, 1 min	$U_{V\,max}$	V	–	–	16
Pressure	p_{max}	kPa	–	–	160
Storage temperature	ϑ_L	°C	–40	–	130

Dimension drawings.
M Pin marking

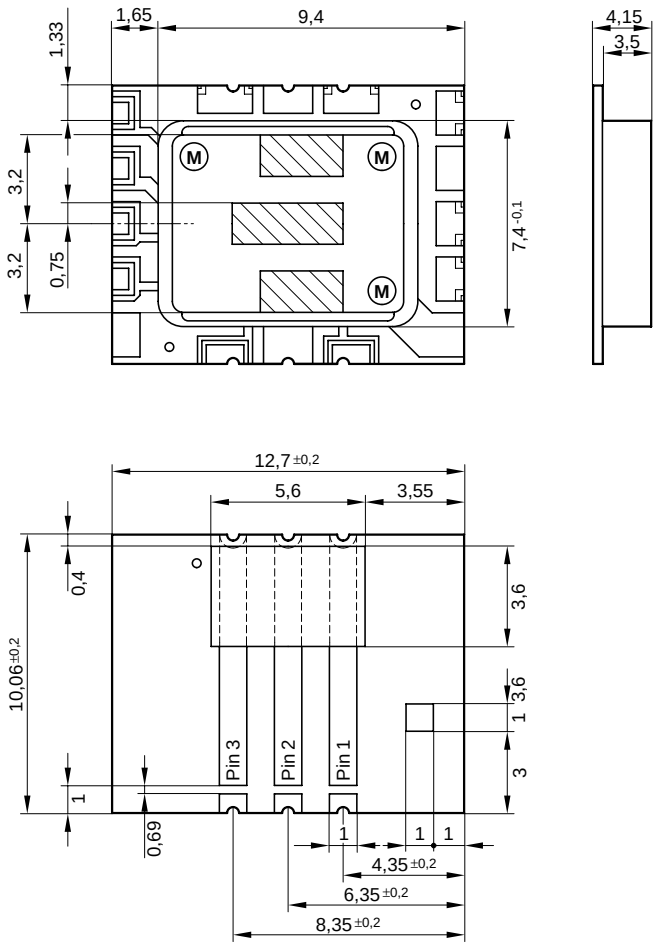

Connector-pin assignment
For operation, only the following pins are needed:
Pin 1 OUT output signal
Pin 2 GND (ground)
Pin 3 U_V supply voltage

Piezoresistive absolute-pressure sensors in thick-film technology

Measurement of pressures in gases up to 250 kPa

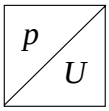

- Thick-film pressure-measuring element ensures a high degree of measurement sensitivity.
- Thick-film sensor element and IC on the same substrate guarantee problem-free signal transmission.
- Integrated evaluation circuit for signal amplification, temperature compensation, and characteristic-curve adjustment
- Sensor enclosed by robust housing.

Design and function

The heart of this sensor is the "sensor bubble" (pressure-measuring element) produced using 100% thick-film techniques. It is hermetically sealed on a ceramic substrate and contains a given volume of air at a reference pressure of approx. 20 kPa. Piezo-resistive thick-film strain gauges are printed onto the bubble and protected with glass against aggressive media. The strain gauges are characterized by high measurement sensitivity (gauge factor approx. 12), as well as by linear and hysteresis-free behavior. When pressure is applied, they convert mechanical strain into an electric signal. A full-wave bridge circuit provides a measurement signal which is proportional to the applied pressure, and this is amplified by a hybrid circuit on the same substrate. It is therefore impossible for interference to have any effect through the leads to the ECU. DC amplification and individual temperature compensation in the –40 °C...+125 °C range, produce an analog, ratiometric (i.e. proportional to the supply voltage U_V) output voltage U_A. The pressure sensors are resistant to gauge pressures up to 600 kPa.
Outside the temperature range 10 °C...85 °C the permissible tolerance increases by the tolerance multiplier. To protect the sensors, the stipulated maximum values for supply voltage, operating-temperature, and maximum pressure are not to be exceeded.

Explanation of symbols

U_V Supply voltage
U_A Output voltage
Δp Permissible accuracy in the range 10 °C...85 °C
k Tolerance multiplier
ϑ Temperature
p_{abs} Absolute pressure

Characteristic curves 1 (U_V = 5 V).

$$U_A = U_V \cdot \left(0{,}01\,\frac{p_{abs}}{\text{kPa}} - 0{,}12\right)$$

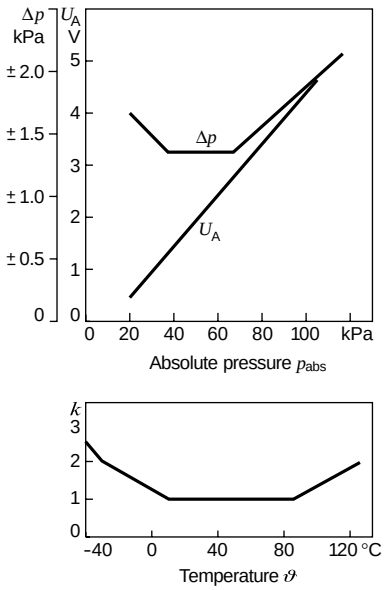

Characteristic curves 2 (U_V = 5 V).

$$U_A = U_V \cdot \left(\frac{0{,}85}{230} \cdot \frac{p_{abs}}{\text{kPa}} + 0{,}0061\right)$$

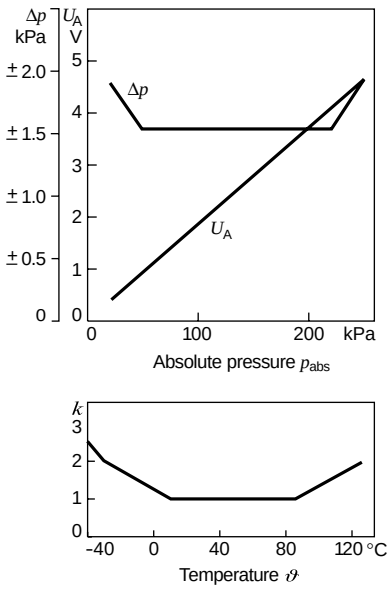

Technical data / Range

Part number		**0 261 230 004**	**0 281 002 119**
Characteristic curve		1	2
Measuring range	kPa	20…105	20…250
Max. pressure (1 s, 30 °C)	kPa	600	500
Pressure-change time	ms	≤ 10	≤ 10
Supply voltage U_V	V	4.75…5.25	4.75…5.25
Max. supply voltage	V	16	16
Input current I_V	mA	< 10	< 10
Load impedance R_L	kΩ	> 50	> 50
Operating temperature range	°C	–40…+125	–40…+120
Degree of protection		IP 54 A	–

Accessories

Connector	**1 237 000 039**

Block diagram.
A Strain-gauge pressure-measuring cell,
B Amplifier,
C Temperature-compensation circuit

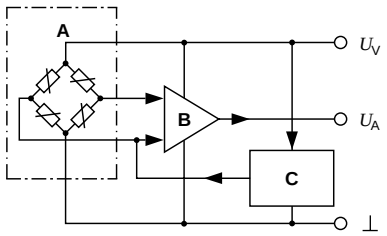

Design.
1 Strain-gauge pressure-measuring cell, **2** Plastic housing, **3** Thick-film hybrid (sensor and evaluation circuit), **4** Operational amplifier, **5** Housing cover, **6** Thick-film sensor element (sensor bubble), **7** Aluminum base plate.

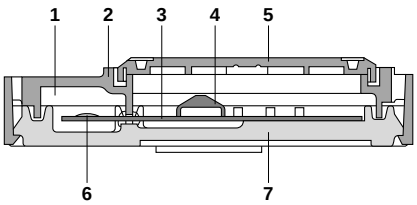

Installation instructions
A hose forms the connection between the sensor and the gas pressure to be measured. Upon installation, the sensor pressure connection should point downwards to prevent the ingress of moisture. The angular position referred to the vertical must be +20°...–85°, preferably 0°.
Suggested fastening:
M6 screw with spring washer.

Connector-pin assignment
Terminal 1 $+U_V$
Terminal 2 Ground
Terminal 3 U_A

Dimension drawings.

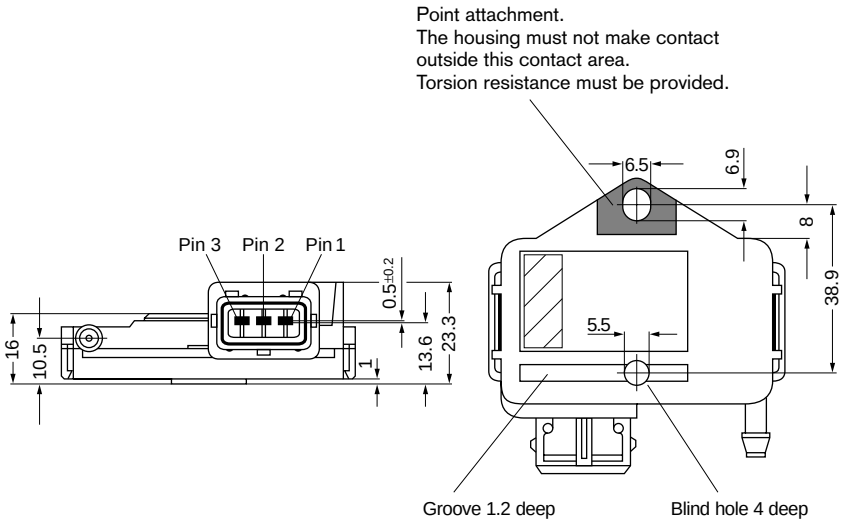

Absolute-pressure sensors in micromechanical hybrid design

Measurement of pressures in gases up to 400 kPa

- High accuracy.
- EMC protection better than 100 V m^{-1}.
- Temperature-compensated.
- Version with additional integral temperature sensor.

Applications
This sensor is used to measure the absolute intake-manifold pressure. On the version with integral temperature sensor, the temperature of the drawn-in air flow is also measured.

Design and function
The piezoresistive pressure-sensor element and suitable electronic circuitry for signal-amplification and temperature compensation are mounted on a silicon chip. The measured pressure is applied from above to the diaphragm's active surface. A reference vacuum is enclosed between the rear side and the glass base. Thanks to a special coating, both pressure sensor and temperature sensor are insensitive to the gases and liquids which are present in the intake manifold.

Installation information
The sensor is designed for mounting on a horizontal surface of the vehicle's intake manifold. The pressure fitting together with the temperature sensor extend into the manifold and are sealed-off to atmosphere by O-rings. By correct mounting in the vehicle (pressure-monitoring point on the top at the intake manifold, pressure fitting pointing downwards etc.) it is to be ensured that condensate does not collect in the pressure cell.

Range

Pressure range kPa (p_1...p_2)	Characteristic curve[1])	Features	Dimension drawing[2])	Order No.
10...115	1		1	**B 261 260 136**[3])
10...115	1		2	**0 261 230 052**
20...250	1		1	**0 281 002 487**
10...115	1	Integral temperature sensor	3	**0 261 230 030**
20...250	1	Integral temperature sensor	3	**0 261 230 042**
20...300	1	Integral temperature sensor	3	**0 281 002 437**
50...350	2	Integral temperature sensor	3	**0 281 002 456**
50...400	2	Integral temperature sensor	3	**B 261 260 508**[3])

[1]) The characteristic-curve tolerance and the tolerance expansion factor apply for all versions, see Page 36
[2]) See Page 37
[3]) Provisional draft number, order number available upon enquiry. Available as from about the end of 2001

Accessories

Plug housing	Qty. required: 1[4])	**1 928 403 966**
Plug housing	Qty. required: 1[5])	**1 928 403 736**
Contact pin	Qty. required: 3 or 4[6])	**1 928 498 060**
Individual gasket	Qty. required: 3 or 4[6])	**1 928 300 599**

[4]) Plug housing for sensors without integral temperature sensor
[5]) Plug housing for sensors with integral temperature sensor
[6]) Sensors without temperature sensor each need 3 contacts and gaskets. Sensors with integral temperature sensor each need 4 contacts and gaskets

Technical data

			min.	typ.	max.
Operating temperature	ϑ_B	°C	–40	–	+130
Supply voltage	U_V	V	4.5	5.0	5.5
Current consumption at U_V = 5 V	I_V	mA	6.0	9.0	12.5
Load current at output	I_L	mA	–1.0	–	0.5
Load resistance to U_V or ground	$R_{pull\text{-}up}$	kΩ	5	680	–
	$R_{pull\text{-}down}$	kΩ	10.0	100	–
Response time	$t_{10/90}$	ms	–	1.0	–
Voltage limitation at U_V = 5 V					
Lower limit	$U_{A\,min}$	V	0.25	0.3	0.35
Upper limit	$U_{A\,max}$	V	4.75	4.8	4.85

Limit data

Supply voltage	$U_{V\,max}$	V	–	–	+16
Storage temperature	ϑ_L	°C	–40	–	+130

Temperature sensor

Measuring range	ϑ_M	°C	–40	–	+130
Measured current	I_M	mA	–	–	1[1])
Nominal resistance at +20 °C		kΩ	–	2.5±5%	–
Thermal time constant	t_{63}	s	–	–	10[2])

[1]) Operation at 5 V with 1 kΩ series resistor
[2]) In air with a flow rate of 6 m · s^{-1}

Sectional view.
Section through the sensor cell **Section through the DS-S2 pressure sensor**

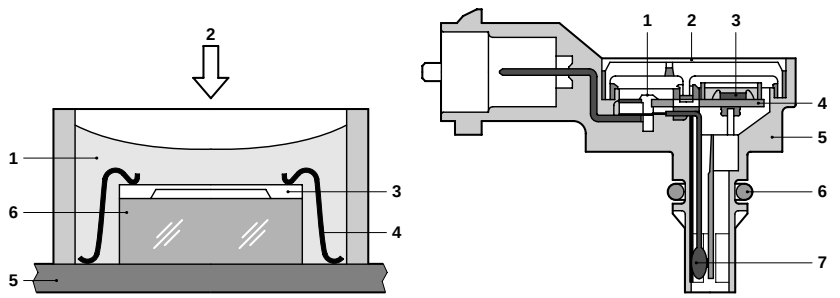

Section through the sensor cell.
1 Protective gel, **2** Pressure, **3** Sensor chip, **4** Bonded connection, **5** Ceramic substrate, **6** Glass base.

Section through the pressure sensor.
1 Bonded connection, **2** Cover, **3** Sensor chip, **4** Ceramic substrate, **5** Housing with pressure-sensor fitting, **6** Gasket, **7** NTC element.

Signal evaluation: Recommendation.
R Reference
D Pressure signal
T Temperature signal

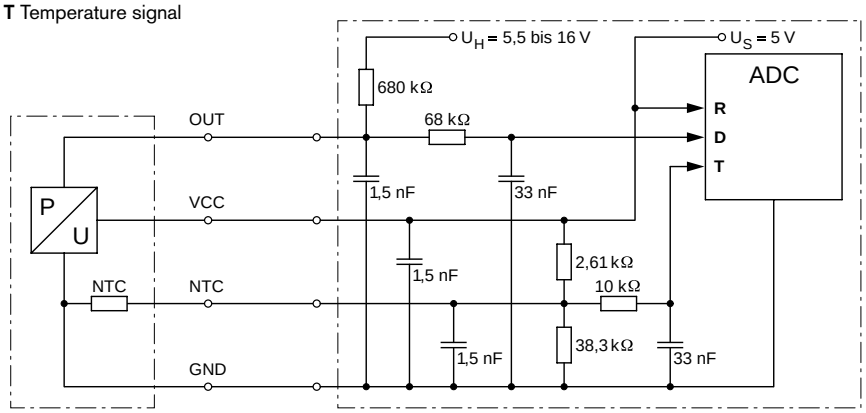

Pressure sensor **ECU**

Signal evaluation: Recommendation.
The pressure sensor's electrical output is so designed that malfunctions caused by cable open-circuits or short circuits can be detected by a suitable circuit in the following electronic circuitry. The diagnosis areas situated outside the characteristic-curve limits are provided for fault diagnosis. The circuit diagram shows an example for detection of all malfunctions via signal outside the characteristic-curve limitation.

Absolute-pressure sensors in micromechanical hybrid design (contd.)
Measurement of pressures in gases up to 400 kPa

Characteristic curve 1 (U_V = 5.0 V).

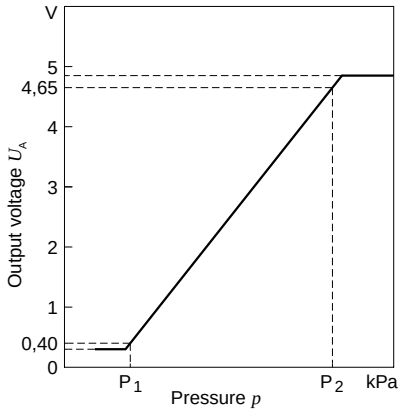

Characteristic curve (U_V = 5.0 V).

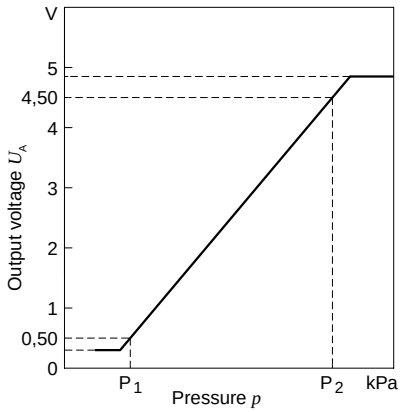

Characteristic-curve tolerance.

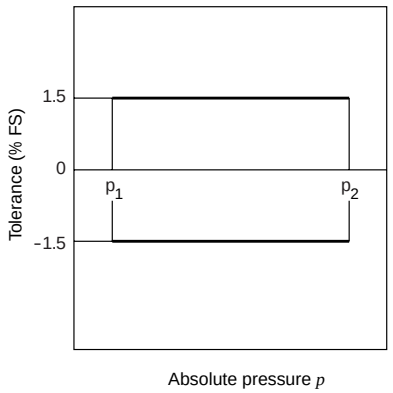

Tolerance-expansion factor.

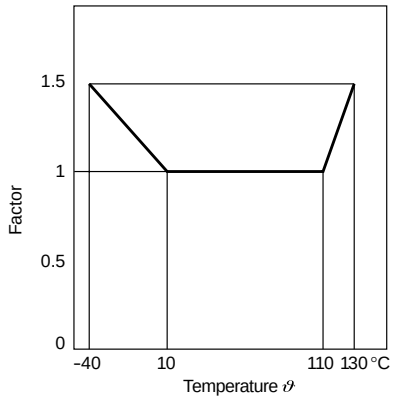

Temperature-sensor characteristic curve.

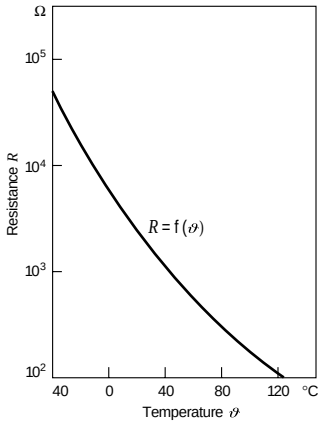

Explanation of symbols.

U_A Output voltage
U_V Supply voltage
k Tolerance multiplier
D After continuous operation
N As-new state

Dimensions drawings.

①
Connector-pin assignment
Pin 1 +5 V
Pin 2 Ground
Pin 3 Output signal

②
Connector-pin assignment
Pin 1 +5 V
Pin 2 Ground
Pin 3 Output signal

③
Connector-pin assignment
Pin 1 Ground
Pin 2 NTC resistor
Pin 3 +5 V
Pin 4 Output signal

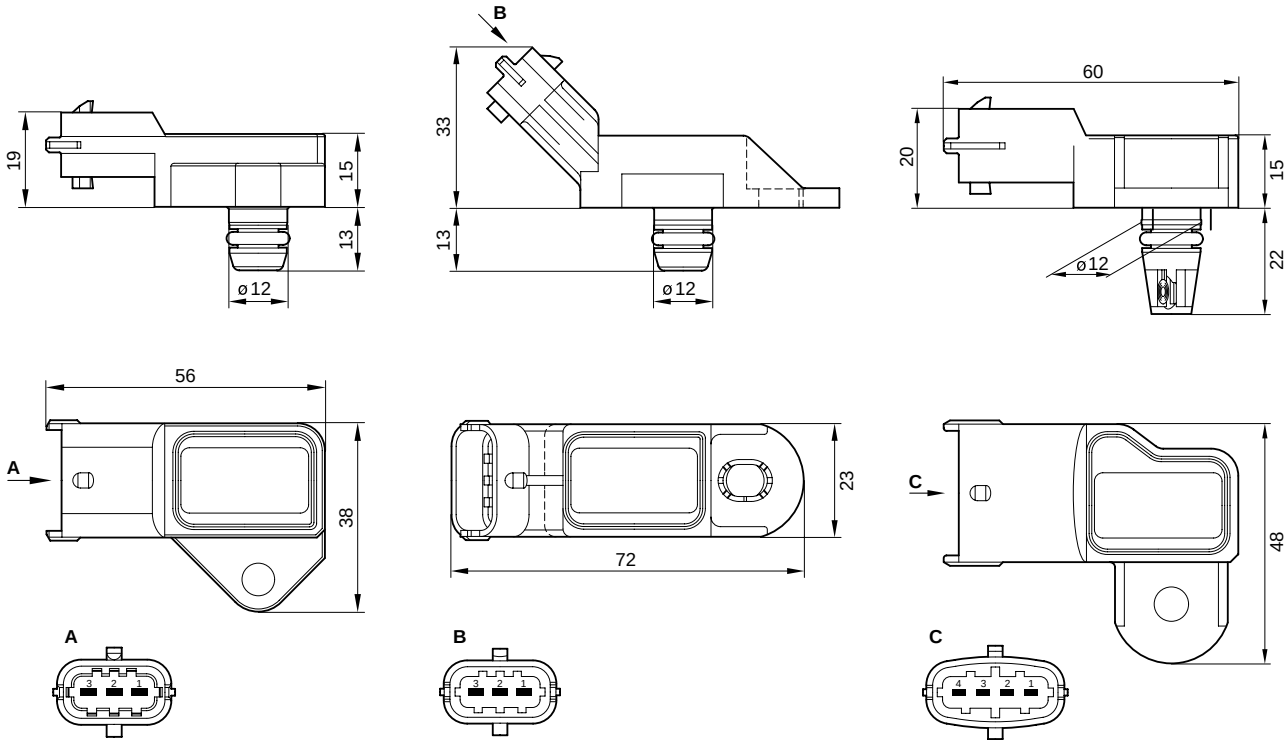

Piezoresistive absolute-pressure sensor with moulded cable

Measurement of pressures in gases up to 400 kPa

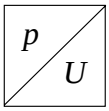

- Pressure-measuring element with silicon diaphragm ensures extremely high accuracy and long-term stability.
- Integrated evaluation circuit for signal amplification and characteristic-curve adjustment.
- Very robust construction.

Applications
This type of absolute-pressure sensor is highly suitable for measuring the boost pressure in the intake manifold of turbo-charged diesel engines. They are needed in such engine assemblies for boost-pressure control and smoke limitation.

Design and function
The sensors are provided with a pressure-connection fitting with O-ring so that they can be fitted directly at the measurement point without the complication and costs of installing special hoses. They are extremely robust and insensitive to aggressive media such as oils, fuels, brake fluids, saline fog, and industrial climate.
In the measuring process, pressure is applied to a silicon diaphragm to which are attached piezoresistive resistors. Using their integrated electronic circuitry, the sensors provide an output signal the voltage of which is proportional to the applied pressure.

Installation information
The metal bushings at the fastening holes are designed for tightening torques of maximum 10 N · m.
When installed, the pressure fitting must point downwards. The pressure fitting's angle referred to the vertical must not exceed 60°.

Tolerances
In the basic temperature range, the maximum pressure-measuring error Δp (referred to the excursion: 400 kPa–50 kPa = 350 kPa) is as follows:
Pressure range 70...360 kPa
As-new state ±1.0 %
After endurance test ±1.2 %
Pressure range < 70 and > 360 kPa (linear increase)
As-new state ±1.8 %
After endurance test ±2.0 %

Technical data / Range

Part number	**0 281 002 257**
Measuring range	50...400 kPa
Basic measuring range with enhanced accuracy	70...360 kPa
Resistance to overpressure	600 kPa
Ambient temperature range/sustained temperature range	–40...+120 °C
Basic range with enhanced accuracy	+20...+110 °C
Limit-temperature range, short-time	≤ 140 °C
Supply voltage U_V	5 V ±10 %
Current input I_V	≤ 12 mA
Polarity-reversal strength at I_V ≤ 100 mA	$-U_V$
Short-circuit strength, output	To ground and U_V
Permissible loading	
Pull down	≥ 100 kΩ
	≤ 100 nF
Response time $t_{10/90}$	≤ 5 ms
Vibration loading max.	20 g
Protection against water	
Strong hose water at increased pressure	IPX6K
High-pressure and steam-jet cleaning	IPX9K
Protection against dust	IP6KX

Throughout the complete temperature range, the permissible temperature error results from multiplying the maximum permissible pressure measuring error by the temperature-error multiplier corresponding to the temperature in question.

Basic temperature range	+20...+110 °C	1.0 [1]
	+20... – 40 °C	3.0 [1]
	+110...+120 °C	1.6 [1]
	+120...+140 °C	2.0 [1]

[1]) In each case, increasing linearly to the given value.

Accessories

Connector	**1 237 000 039**

Characteristic curve (U_V = 5 V).

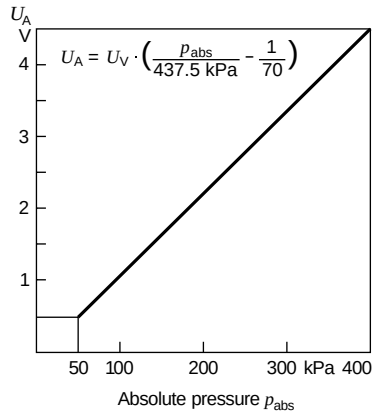

Maximum permissible pressure-measuring error.

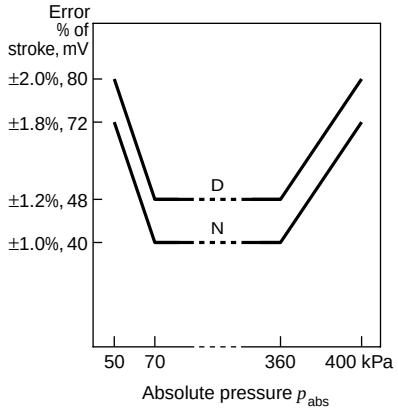

Temperature-error multiplier.

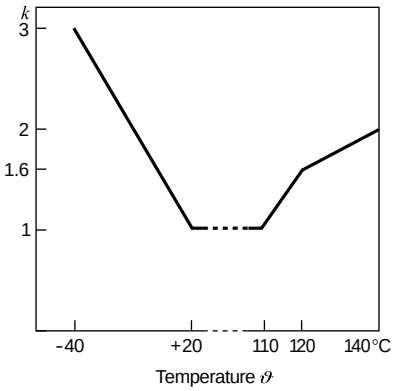

Dimension drawings.
S 3-pole plug
O1 O-ring dia. 11.5x2.5 mm HNBR-75-ShA

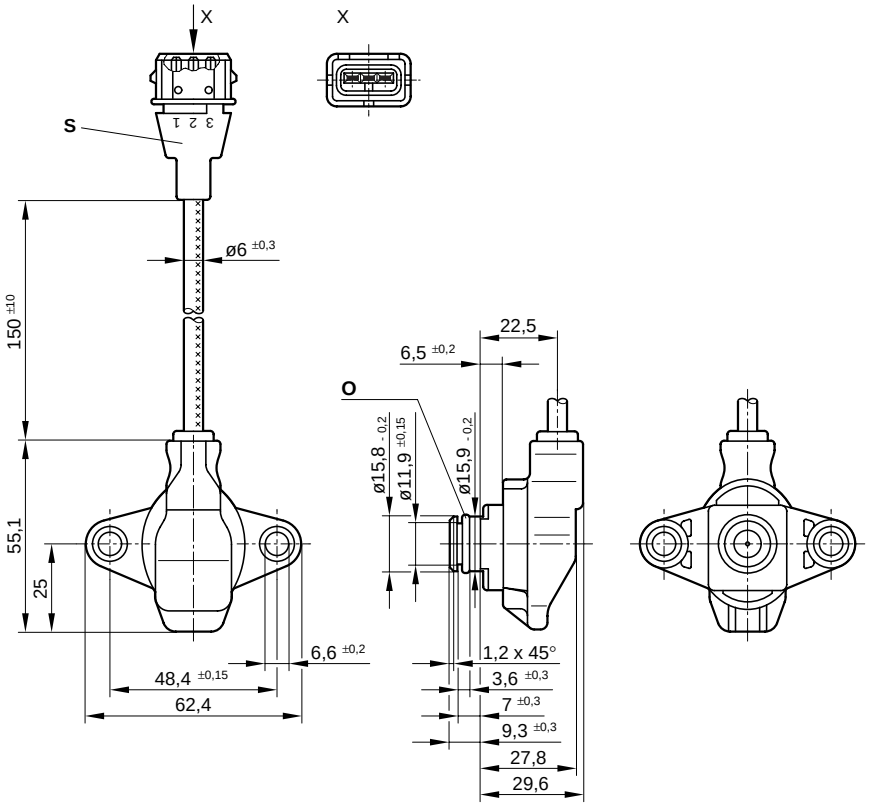

Explanation of symbols

U_V	Supply voltage
U_A	Output voltage (signal voltage)
k	Temperature-error multiplier
p_{abs}	Absolute pressure
g	Acceleration due to gravity 9.81 m · s^{-2}
D	After endurance test
N	As-new state

Connector-pin assignment

Pin 1	U_A
Pin 2	+5 V
Pin 3	Ground

Medium-resistant absolute-pressure sensors Micromechanical type

Measurement of pressure in gases and liquid mediums up to 600 kPa

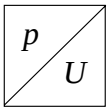

- Delivery possible either without housing or inside rugged housing.
- EMC protection up to 100 V · m⁻¹.
- Temperature-compensated.
- Ratiometric output signal.
- All sensors and sensor cells are resistive to fuels (incl. diesel), and oils such as engine lube oils.

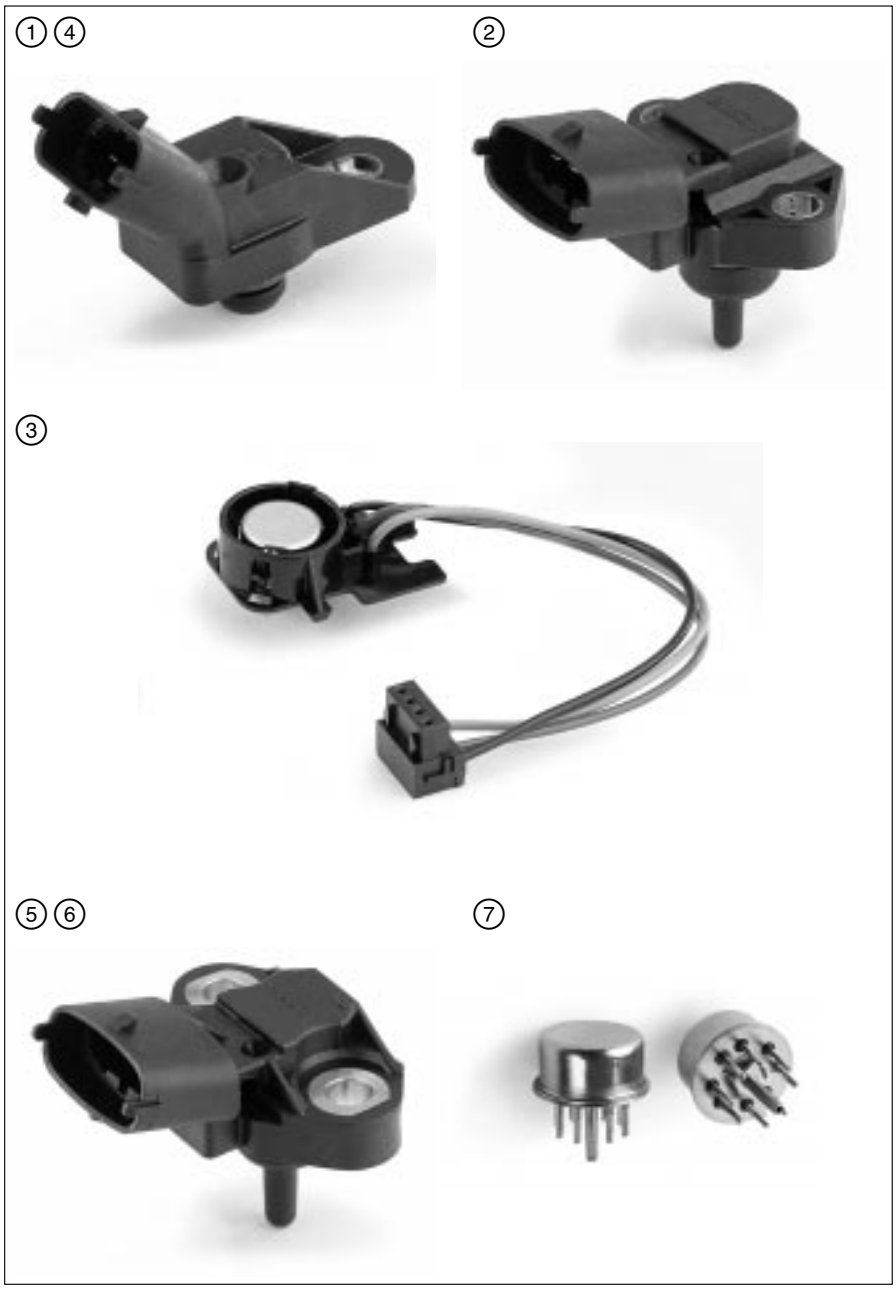

Applications
These monolithic integrated silicon pressure sensors are high-precision measuring elements for measuring the absolute pressure. They are particularly suitable for operations in hostile environments, for instance for measuring the absolute manifold pressure in internal-combustion engines.

Design and function
The sensor contains a silicon chip with etched pressure diaphragm. When a change in pressure takes place, the diaphragm is stretched and the resulting change in resistance is registered by an evaluation circuit. This evaluation circuit is integrated on the silicon chip together with the electronic calibration elements. During production of the silicon chip, a silicon wafer on which there are a number of sensor elements, is bonded to a glass plate. After sawing the plate into chips, the individual chips are soldered onto a metal base complete with pressure connection fitting. When pressure is applied, this is directed through the fitting and the base to the rear side of the pressure diaphragm. There is a reference vacuum trapped underneath the cap welded to the base. This permits the absolute pressure to be measured as well as protecting the front side of the pressure diaphragm. The programming logic integrated on the chip performs a calibration whereby the calibration parameters are permanently stored by means of thyristors (Zener-Zapping) and etched conductive paths. The calibrated and tested sensors are mounted in a special housing for attachment to the intake manifold.

Signal evaluation
The pressure sensor delivers an analog output signal which is ratiometric referred to the supply voltage. In the input stage of the downstream electronics, we recommend the use of an RC low-pass filter with, for instance, t = 2 ms, in order to suppress any disturbance harmonics which may occur. In the version with integrated temperature sensor, the sensor is in the form of an NTC resistor (to be operated with series resistor) for measuring the ambient temperature.

Installation information
When installed, the pressure connection fitting must point downwards in order that condensate cannot form in the pressure cell.

Construction
Sensors with housing:
This version is equipped with a robust housing. In the version with temperature sensor, the sensor is incorporated in the housing.
Sensors without housing:
Casing similar to TO case, pressure is applied through a central pressure fitting. Of the available soldering pins the following are needed:
Pin 6 Output voltage U_A,
Pin 7 Ground,
Pin 8 +5 V.

Range

Pressure sensor integrated in rugged, media-resistant housing

Pressure range kPa (p1...p2)	Chara. curve [1]	Features	Dimension drawing [2]		Part number
20...115	1	–	4	1	**0 261 230 020**
20...250	1	–	4	1	**0 281 002 137**
10...115	1	Integrated temperature sensor	2	2	**0 261 230 022**
20...115	1	Integrated temperature sensor	2	2	**0 261 230 013**
20...250	1	Integrated temperature sensor	2	2	**0 281 002 205**
50...350	2	Integrated temperature sensor	5	(5) [3]	**0 281 002 244**
50...400	2	Integrated temperature sensor	–	–	**0 281 002 316**
50...600	2	Integrated temperature sensor	6	6	**0 281 002 420**
10...115	1	Hose connection	1	(1) [3]	**0 261 230 009**
15...380	2	Clip-type module with connection cable	3	3	**1 267 030 835**

Pressure-sensor cells in casings similar to transistors
Suitable for installation inside devices

Pressure range kPa (p1...p2)	Chara. curve [1]	Features	Dimension drawing [2]		Part number
10...115	1	–	7	7	**0 273 300 006**
15...380	2	–	7	7	**0 273 300 017**
15...380	2	–	8	(7) [3]	**0 261 230 036**
20...105	1	–	7	7	**0 273 300 001**
20...115	1	–	7	7	**0 273 300 002**
20...250	1	–	7	7	**0 273 300 004**
50...350	2	–	7	7	**0 273 300 010**
50...400	2	–	7	7	**0 273 300 019**
50...400	2	–	8	(7) [3]	**0 261 230 033**
50...600	2	–	7	7	**0 273 300 012**

[1]) The characteristic-curve tolerance and the tolerance extension factor apply to all versions, refer to Page 42.
[2]) See Page 43/44 [3]) For similar drawing, see dimension drawing on Pages 43/44
[4]) To be obtained from AMP Deutschland GmbH, Amperestr. 7–11, D-63225 Langen, Tel. 0 61 03/7 09-0, Fax 0 61 03/7 09 12 23, E-Mail: AMP.Kontakt@tycoelectronics.com

Accessories

For 0 261 230 009, .. 020; 0 281 002 137

Plug housing	**1 928 403 870**
Contact pin	**2-929 939-1** [4])
Individual gasket	**1 987 280 106**

For 0 261 230 013, .. 022; 0 281 002 205, ..420

Plug housing	**1 928 403 913**
Contact pin	**2-929 939-1** [4])
Individual gasket	**1 987 280 106**

For 0 281 002 244

Plug housing	**1 928 403 913**
Contact pin	**2-929 939-6** [4])
Individual gasket	**1 987 280 106**

For 0 281 002 420

Plug housing	**1 928 403 736**
Contact pin	**1 928 498 060**
Individual gasket	**1 928 300 599**

Note
Each 3-pole plug requires 1 plug housing, 3 contact pins, and 3 individual gaskets.
4-pole plugs require 1 plug housing, 4 contact pins, and 4 individual gaskets.

Technical data

		min.	typical	max.
Supply voltage U_V	V	4.5	5	5.5
Current input I_V at U_V = 5 V	mA	6	9	12.5
Load current at output	mA	–0.1	–	0.1
Load resistance to ground or U_V	kΩ	50	–	–
Lower limit at U_V = 5 V	V	0.25	0.30	0.35
Upper limit at U_V = 5 V	V	4.75	4.80	4.85
Output resistance to ground U_V open	kΩ	2.4	4.7	8.2
Output resistance to U_V, ground open	kΩ	3.4	5.3	8.2
Response time $t_{10/90}$	ms	–	0.2	–
Operating temperature	°C	–40	–	+125
Limit data				
Supply voltage U_V	V	–	–	16
Operating temperature	°C	–40	–	+130
Recommendation for signal evaluation				
Load resistance to U_H = 5.5...16 V	kΩ	–	680	–
Load resistance to ground	kΩ	–	100	–
Low-pass resistance	kΩ	–	21.5	–
Low-pass capacitance	nF	–	100	–
Temperature sensor				
Measuring range	°C	–40	–	+125
Nominal voltage	mA	–	–	1 [5])
Measured current at +20 °C	kΩ	–	2,5 ±5 %	–
Temperature time constant t_{63} [6])	s	–	–	45

[5]) Operation with series resistor 1 kΩ.
[6]) In air with airflow speed 6 m · s^{-1}.

Micromechanical TO-design absolute-pressure sensors (contd.)
Measurement of pressures in gases and liquid media up to 600 kPa

Characteristic curve 1 (U_V = 5.0 V).

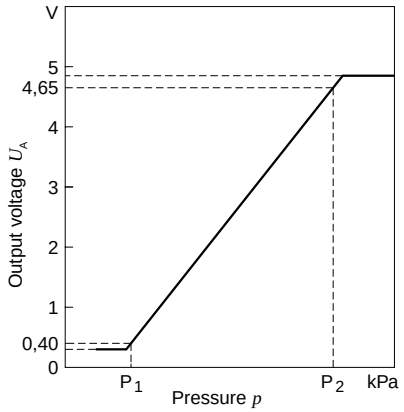

Characteristic curve 2 (U_V = 5.0 V).

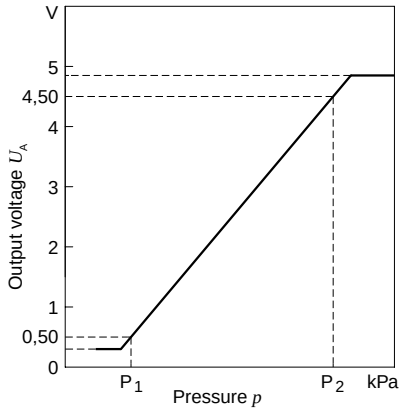

Characteristic-curve tolerance.

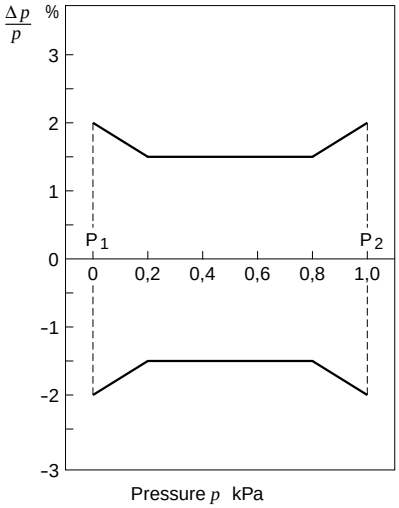

Tolerance extension factor.

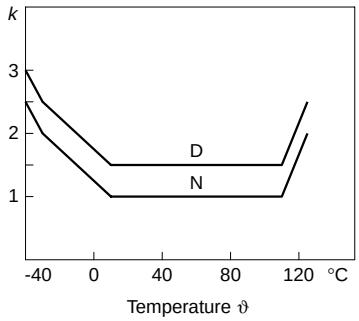

Temperature-sensor characteristic curve.

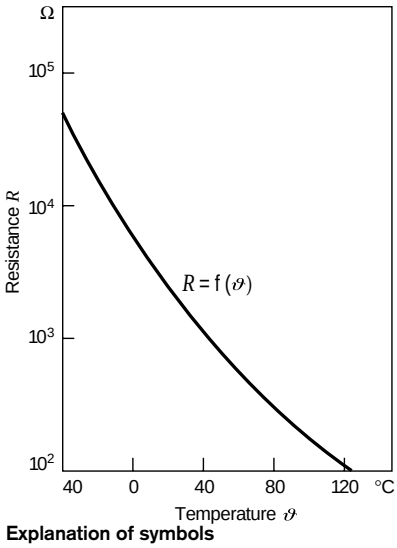

Explanation of symbols

U_A Output voltage
U_V Supply voltage
k Tolerance multiplication factor
D Following endurance test
N As-new state

Block diagram.
E Characteristic curve: Sensitivity,
K Compensation circuit
O Characteristic curve: Offset,
S Sensor bridge, **V** Amplifier

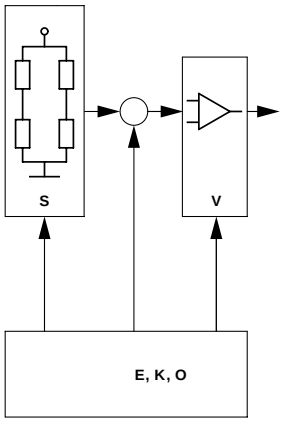

Sectional views.
Pressure sensor in housing.
1 Pressure sensor, **2** pcb, **3** Pressure fitting,
4 Housing, **5** Temperature sensor,
6 Electrical bushing, **7** Glass insulation,
8 Reference vacuum,
9 Aluminum connection (bonding wire),
10 Sensor chip, **11** Glass base,
12 Welded connection,
13 Soldered connection.

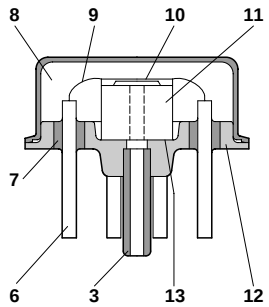

Section through the installed pressure sensor.

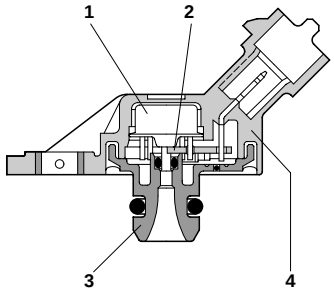

Installed pressure sensor.
Version with temperature sensor.

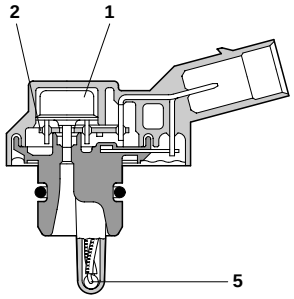

Dimension drawings. P Space required by plug and cable.

① **0 261 230 009**
Connector-pin assignment
Pin 1 +5 V
Pin 2 Ground
Pin 3 Output signal

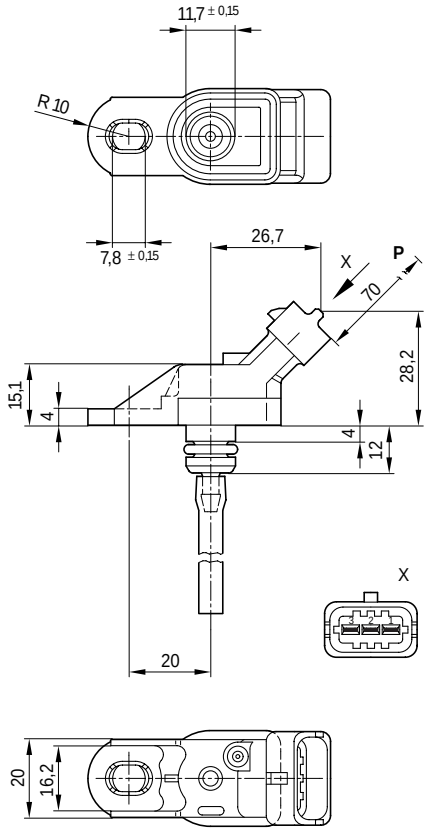

② **0 261 230 013, 0 261 230 022, 0 281 002 205**
Connector-pin assignment
Pin 1 Ground
Pin 2 NTC resistor
Pin 3 +5 V
Pin 4 Output signal

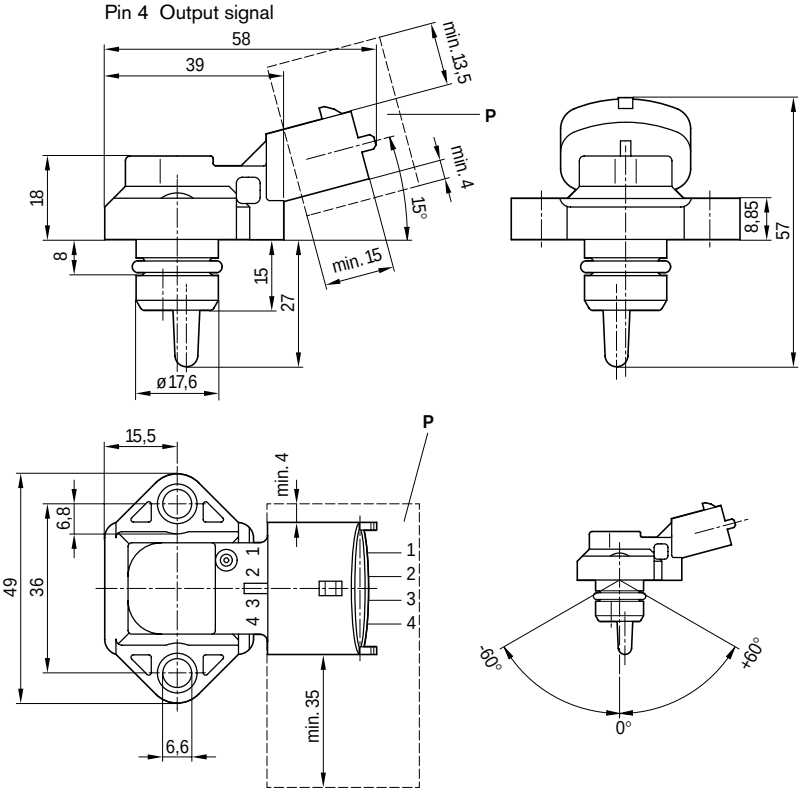

③ **1 267 030 835**
Connector-pin assignment
Pin 1 Ground
Pin 2 +5 V
Pin 3 Vacant
Pin 4 Output signal

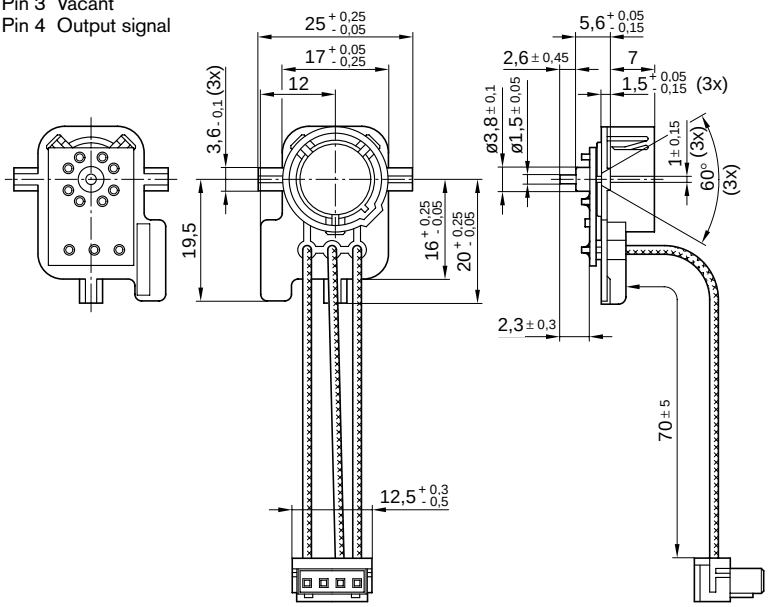

④ **0 261 230 020, 0 281 002 137**
Connector-pin assignment
Pin 1 +5 V
Pin 2 Ground
Pin 3 Output signal

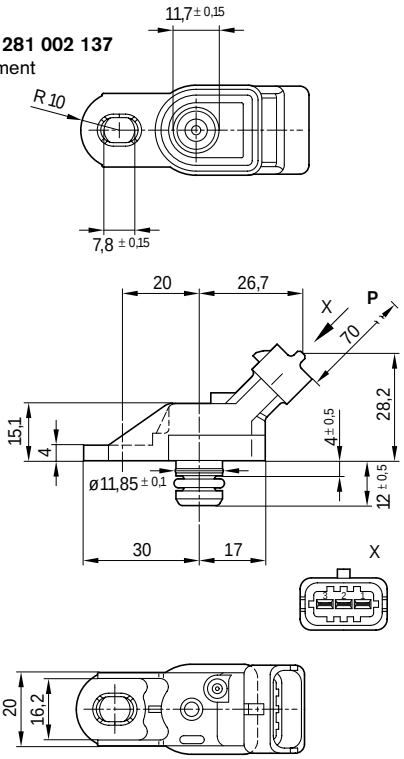

Micromechanical TO-design absolute-pressure sensors (contd.)
Measurement of pressures in gases and liquid media up to 600 kPa

Dimension drawings A Space required by plug and cable
B Space required when plugging in/unplugging

⑤ **0 281 002 244**
Connector-pin assignment
Pin 1 Ground
Pin 2 NTC resistor
Pin 3 +5 V
Pin 4 Output signal

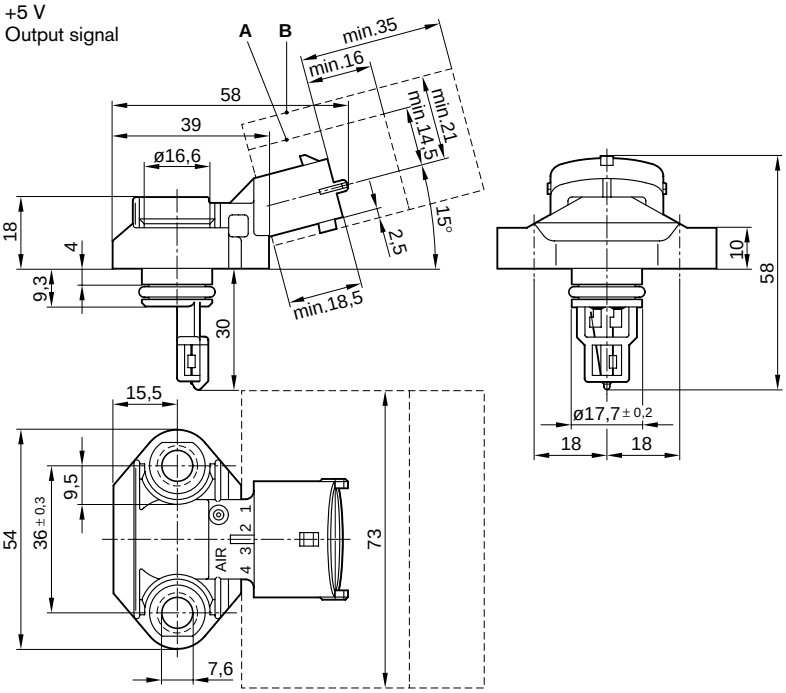

⑦ **0 273 300 ..**
Sensor without housing
D Pressure-connection fitting
Pin 6 Output signal
Pin 7 Soldered

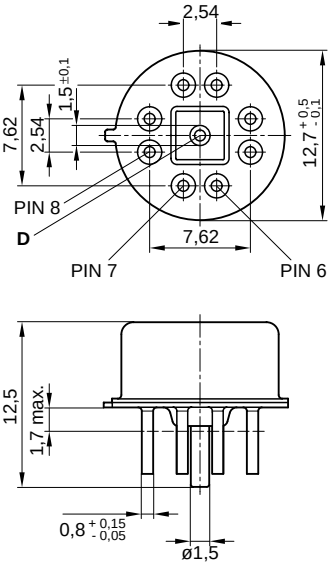

⑥ **0 281 002 246**
Connector-pin assignment
Pin 1 Ground
Pin 2 NTC resistor
Pin 3 +5 V
Pin 4 Output signal

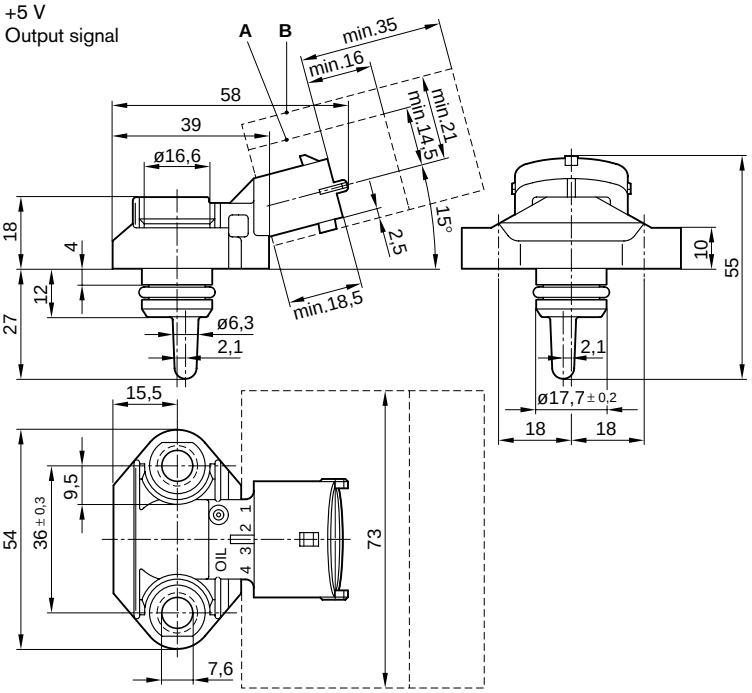

⑧ **0 261 230 036 ..**
D Pressure connection
L In the area of the measuring surface

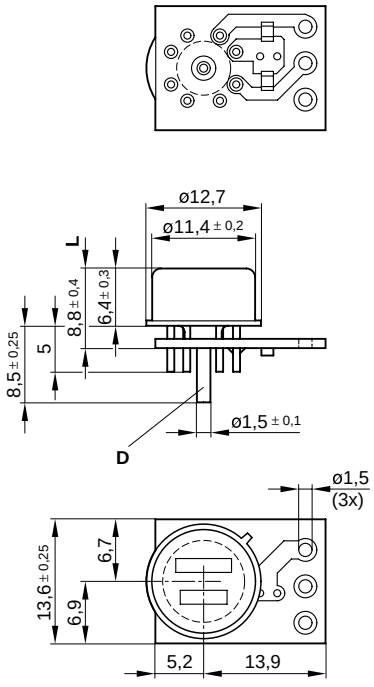

Pressure sensors

For pressures up to 1800 bar (180 Mpa)

- Ratiometric signal evaluation (referred to supply voltage).
- Self-monitoring of offset and sensitivity.
- Protection against polarity reversal, overvoltage, and short circuit of output to supply voltage or ground.
- High level of compatibility with media since this only comes into contact with stainless steel.
- Resistant to brake fluids, mineral oils, water, and air.

Application
Pressure sensors of this type are used to measure the pressures in automotive braking systems, or in the fuel-distributor rail of a gasoline direct-injection engine, or in a diesel engine with Common Rail injection.

Design and function
Pressure measurement results from the bending of a steel diaphragm on which are located polysilicon strain-gauge elements. These are connected in the form of a Wheatstone bridge. This permits high signal utilisation and good temperature compensation.
The measurement signal is amplified in an evaluation IC and corrected with respect to offset and sensitivity. At this point, temperature compensation again takes place so that the calibrated unit comprising measuring cell and ASIC only has a very low temperature-dependence level.
Part of the evaluation IC is applied for a diagnostic function which can detect the following potential defects:
– Fracture of a bonding wire to the measuring cell.
– Fracture anywhere on any of the signal lines.
– Fracture of the bridge supply and ground.

Only for 0 265 005 303
This sensor differs from conventional sensors due to the following diagnostic functions:
– Offset errors
– Amplification errors
can be detected by comparing two signal paths in the sensor.

Storage conditions

Temperature range	–30...+60 °C
Relative air humidity	0...80 %
Maximum storage period	5 years

Through compliance with the above storage conditions, it is ensured that the sensor functions remain unchanged.
If the maximum storage conditions are exceeded, the sensors should no longer be used.

Explanation of symbols

U_A	Output voltage
U_V	Supply voltage
bar	Pressure

Characteristic curve.
$U_A = (0.8 \cdot p / p_{Nom.} + 0.1)U_V$

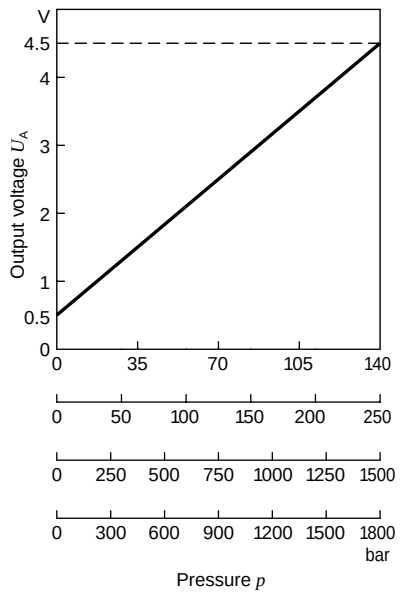

Pressure sensors (contd.)
For pressures up to 1800 bar (180 MPa)

Self-monitoring. Offset and sensitivity. Only for 0 265 005 303.

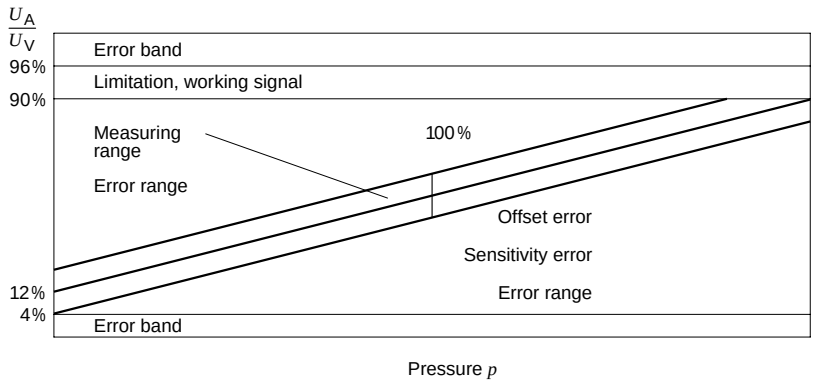

Measuring circuit.

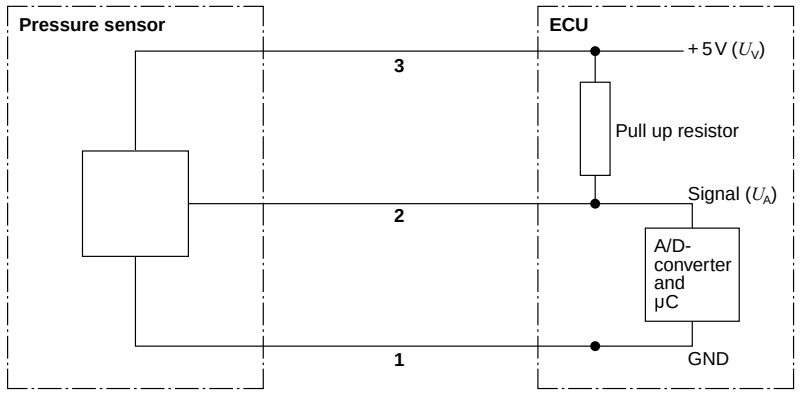

Diagnostic function during self-test (following switch-on). Only for 0 265 005 303.
– Correctness of the calibration values
– Function of the sensor signal path from the sensor to the A/D converter of the evaluation unit
– Check of the supply lines.
Diagram:
Characteristic of the output voltage following switch-on
– Function of the signal and alarm paths
– Detection of offset errors
– Detection of short circuits in wiring harness
– Detection of overvoltage and under-voltage
– If an error is detected during the sensor's self-test, the signal output is switched to the voltage range > 96% U_V.

Diagnostic function during normal operation.
Only for 0 265 005 303.
– Detection of offset errors
– Detection of sensitivity errors (with pressure applied)
– Wiring-harness function, detection of wiring-harness short circuits
– Detection of overvoltage and under-voltage
– If an error is detected during the sensor's self-test, the signal output is switched to the voltage range >96% U_V.

Range

Pressure range bar	(MPa)	Sensor Type	Thread	Connector	Pin	Dimens. drawing	Page	Part number
140	(14)	KV2 BDE	M 10x1	Compact 1.1	Gold-plated	1	47	**0 261 545 006**
250	(25)	–	M 10x1	PSA	–	2	48	**0 265 005 303**
1500	(150)	RDS2	M 12x1.5	Working circuit	Silber-plated	3	48	**0 281 002 238**
			M 12x1.5	Compact 1.1	Gold-plated	4	48	**0 281 002 405**
		RDS3	M 12x1.5	Working circuit	Silber-plated	5	48	**0 281 002 498**
			M 12x1.5	Compact 1.1	Gold-plated	6	49	**0 281 002 522**
1800	(180)	RDS2	M 12x1.5	Compact 1.1	Gold-plated	4	48	**0 281 002 398**
			M 18x1.5	Compact 1.1	Gold-plated	7	49	**0 281 002 472**
		RDS3	M 18x1.5	Compact 1.1	Gold-plated	8	49	**0 281 002 534**
			M 18x1.5	Working circuit	Silber-plated	9	49	**0 281 002 504**

Accessories

For 0 265 005 303

Plug housing	–	Quantity required: 1	AMP No.	**2-967 642-1** [1])
Contact pins	for 0.75 mm²	Quantity required:3	AMP No.	**965 907-1** [1])
Gaskets	for 1.4...1.9 mm²	Quantity required: 3	AMP No.	**967 067-1** [1])

[1]) To be obtained from AMP Deutschland GmbH, Amperestr. 7–11, D-63225 Langen,
Tel. 0 61 03/7 09-0, Fax 0 61 03/7 09 12 23, E-Mail: AMP.Kontakt@tycoelectronics.com

Technical data

Pressure sensor		0 261 545 006	0 265 005 303	0 281 002 238 0 281 002 405	0 281 002 498 0 281 002 522	0 281 002 398 0 281 002 472	0 281 002 534 0 281 002 504
Pressure-sensor type		KV2 BDE	–	RDS2	RDS3	RDS2	RDS3
Application/Medium		Unlead. fuel	Brake fluid	Diesel fuel or RME [1])	Diesel fuel or RME [1])	Diesel fuel or RME [1])	Diesel fuel or RME [1])
Pressure range	bar (MPa)	140 (14)	250 (25)	1500 (150)	1500 (150)	1800 (180)	1800 (180)
Offset accuracy	U_V	0.7 % FS	2.0 %	1.0 % FS 1.5 % FS	0.7 % FS	1.0 % FS	0.7 % FS
Sensitivity accuracy at 5 V							
In range 0...35 bar	FS [2]) of measured value	–	≤ 0.7 %	1.0 % FS 1.5 % FS	0.7 % FS	1.0 % FS	0.7 % FS
In range 35...140 bar		1.5 %	–	–	–	–	–
In range 35...250 bar		–	≤ 5.0 % [3])	–	–	–	–
In range 35...1500 bar		–	–	2.0 % FS 2.5 % FS	1.5 % FS	–	–
In range 35...1800 bar		–	–	–	–	2.3 % FS	1.5 % FS
Input voltage, max. U_s	V	16	–	16	16	16	16
Power-supply voltage U_V	V	5 ±0.25	5 ±0.25	5 ±0.25	5 ±0.25	5 ±0.25	5 ±0.25
Power-supply current I_V	mA	9...15	≤ 20	9...15	9...15	9...15	9...15
Output current I_A	µA...mA	–	–100...3	2.5 mA [4])	–	2.5 mA [4])	–
Load capacity to ground	nF	13	–	10	13	10	13
Temperature range	°C	–40...+130	–40...+120	–40...+120 [5])	–40...+130	–40...+120 [5])	–40...+130
Overpressure max. p_{max}	bar	180	350	1800	2200	2100	2200
Burst pressure p_{burst}	bar	> 300	> 500	3000	4000	3500	4000
Tightening torque M_a	Nm	22 ±2	20 ±2	35 ±5	35 ±5	70 ±2	70 ±2
Response time $T_{10/90}$	ms	2	–	5	2	5	2

Note: All data are typical values
[1]) RME = Rapeseed methyl ester
[2]) FS = Full Scale
[3]) Of measured value
[4]) Output current with pull-up resistor
[5]) +140 °C for max. 250 h

Dimension drawings
Space required by plug, approx. 25 mm
Space required when plugging/unplugging, approx. 50 mm
SW = A/F size

Connector-pin assignment
Pin 1 Ground
Pin 2 Output voltage U_A
Pin 3 Supply voltage U_V

0 261 545 006 ①
140 bar

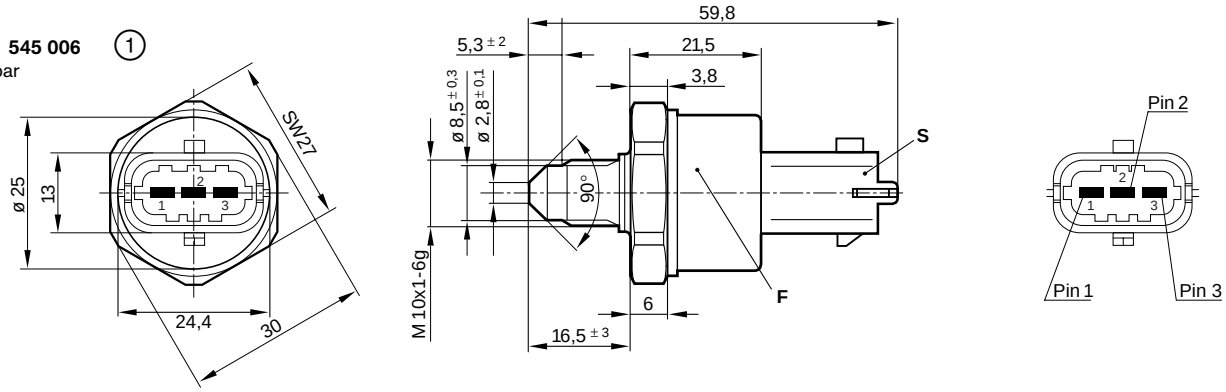

Pressure sensors (contd.)
For pressures up to 1800 bar (180 MPa)

Dimension drawings
Space required by plug, approx. 25 mm
Space required when plugging/unplugging, approx. 50 mm
SW = A/F size

D Gasket
F Date of manufacture
S 3-pin plug

Connector-pin assignment
Pin 1 Ground
Pin 2 Output voltage U_A
Pin 3 Supply voltage U_V

0 265 005 303 (2)
250 bar

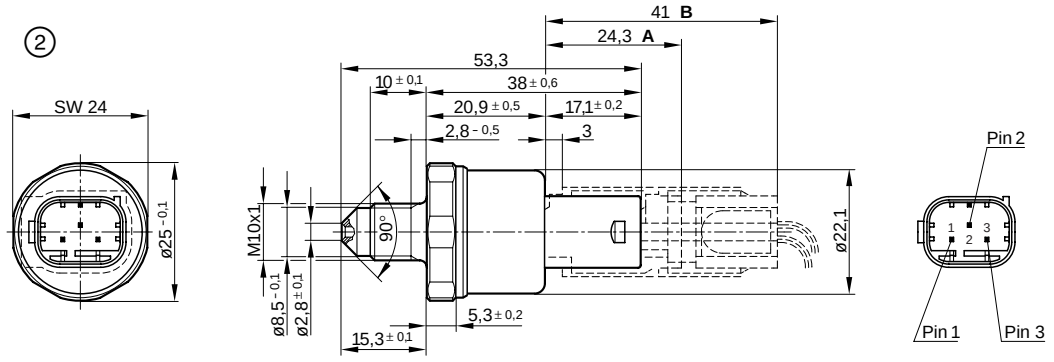

0 281 002 238 (3)
1500 bar

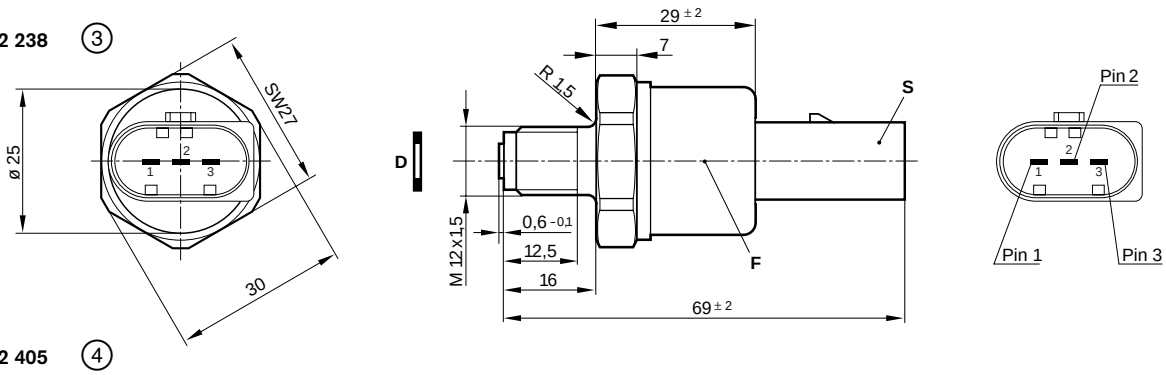

0 281 002 405 (4)
1500 bar
0 281 002 398
1800 bar

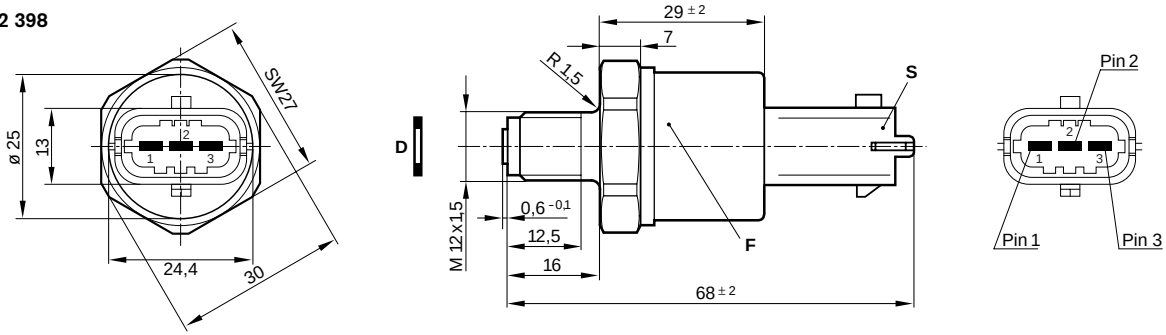

0 281 002 498 (5)
1500 bar

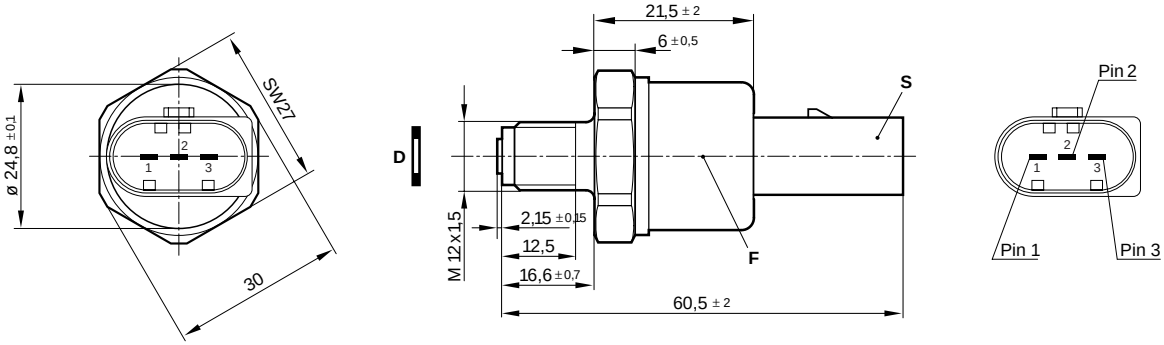

Dimension drawings
Space required by plug, approx. 25 mm
Space required when plugging/unplugging, approx. 50 mm
SW = A/F size

D Gasket
F Date of manufacture
S 3-pin plug

Connector-pin assignment
Pin 1 Ground
Pin 2 Output voltage U_A
Pin 3 Supply voltage U_V

0 281 002 522 (6)
1500 bar

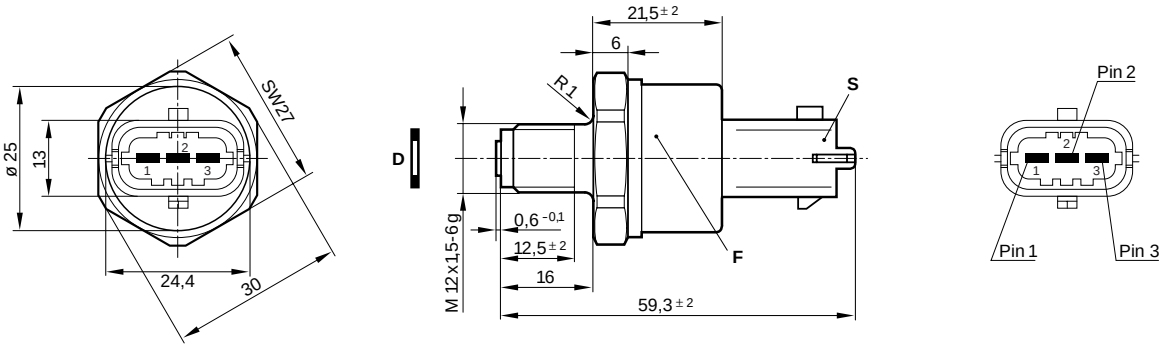

0 281 002 472 (7)
1800 bar

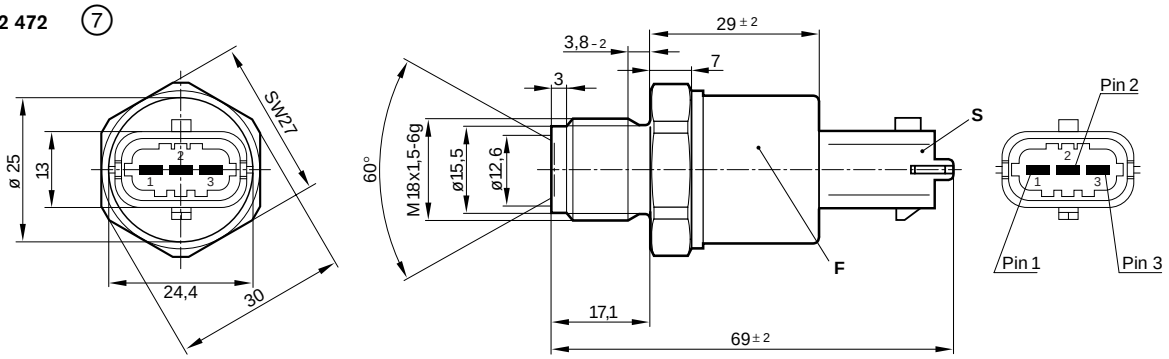

0 281 002 534 (8)
1800 bar

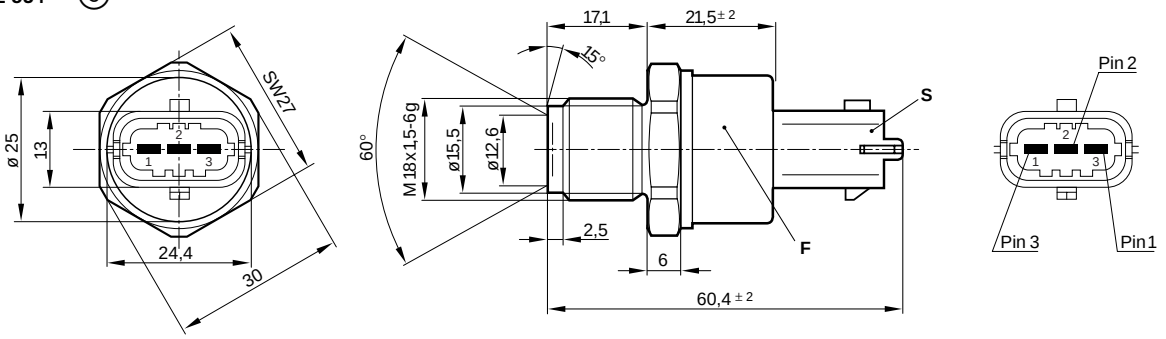

0 281 002 504 (9)
1800 bar

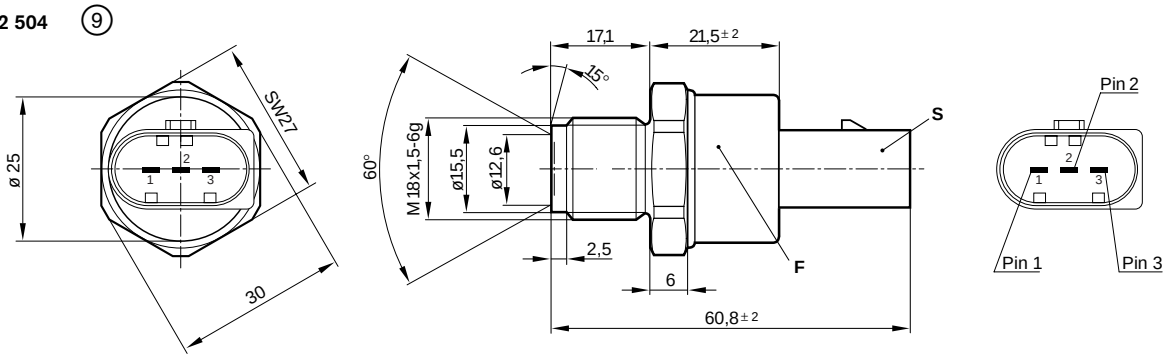

NTC temperature sensors

Measurement of air temperatures between –40 °C and +130 °C

- Measurement with temperature-dependent resistors.
- Broad temperature range.

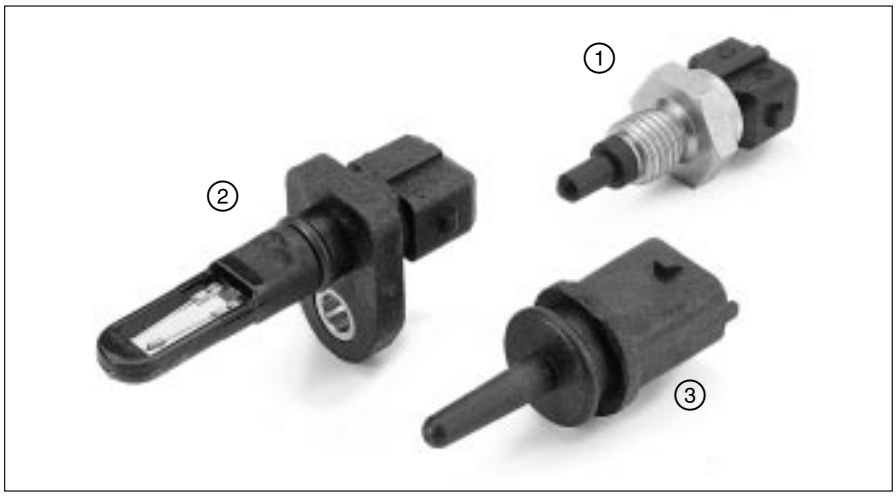

Range

NTC temperature sensor
NTC resistor in plastic sheath

Steel housing	
Screw fastening	**0 280 130 039**
Polyamide housing	
Plug-in mounting	**0 280 130 092**
Plug-in mounting	**0 280 130 085**

Accessories

For 0 280 130 039; .. 085	
Connector	**1 237 000 036**

For 0 280 130 092

Designation	For cable cross-section	Part number
Plug housing	–	**1 928 403 137**
Contact pins	0.5...1.0 mm²	**1 987 280 103**
	1.5...2.5 mm²	**1 987 280 105**
Individual gaskets	0.5...1.0 mm²	**1 987 280 106**
	1.5...2.5 mm²	**1 987 280 107**

Note
Each 2-pole plug requires 1 plug housing, 2 contact pins, and 2 individual gaskets. For automotive applications, original AMP crimping tools must be used.

Explanation of symbols:
R Resistance
ϑ Temperature

Temperature sensor (principle).
1 Electrical connection
2 Housing
3 NTC resistor

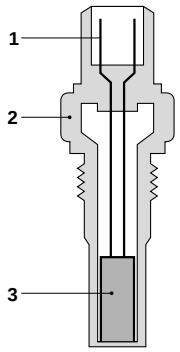

Block diagram.

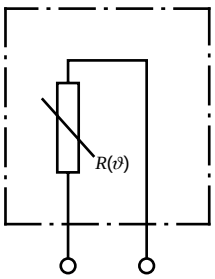

Technical data

Part number		0 280 130 039	0 280 130 085	0 280 130 092
Illustration		1	2	3
Characteristic curve		1	2	1
Measuring range	°C	–40...+130	–40...+130	–40...+130
Permissible temp., max.	°C	+130	+140	+130
Electrical resistance at 20 °C	kΩ	2.5 ±5 %	2.4 ±5.4 %	2.5 ±5 %
Electrical resistance at –10 °C	kΩ	8.26...10.56	–	8.727...10.067
+20 °C	kΩ	2.28...2.72	2.290...2.551	2.375...2.625
+80 °C	kΩ	0.290...0.364	–	–
Nominal voltage	V	≤ 5	≤ 5	≤ 5
Measured current, max.	mA	1	1	1
Self-heating at max. permissible power loss P = 2 mW and stationary air (23 °C)	K	≤ 2	–	≤ 2
Thermal time constant [1])	s	ca. 20	≤ 5 [2])	44
Guide value for permissible vibration acceleration (sinusoidal vibration)	m · s⁻²	100	100	≤ 300
Corrosion-tested as per		DIN 50 018	DIN 50 018	DIN 50 018

[1]) At 20 °C. Time required to reach 63% of final value for difference in resistance, given an abrupt increase in air temperature; air pressure 1000 mbar; air-flow rate 6 m · s⁻¹.
[3]) Time constant τ_{63} in air for a temperature jump of –80 °C to +20 °C at an air-flow rate of ≥ 6 m · s⁻¹.

Dimension drawings.

0 280 130 039 (1)
SW A/F size

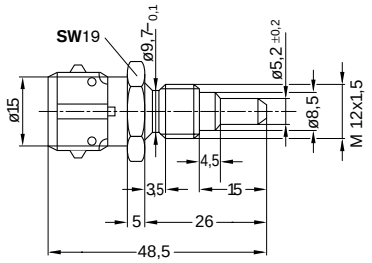

0 280 130 085 (2)
B Mounting screw
X Thread in contact area
L Air flow

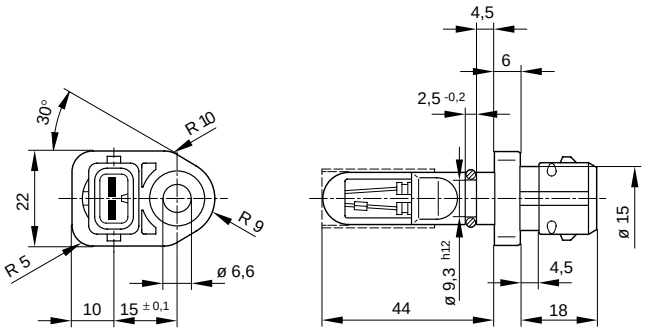

0 280 130 092 (3)

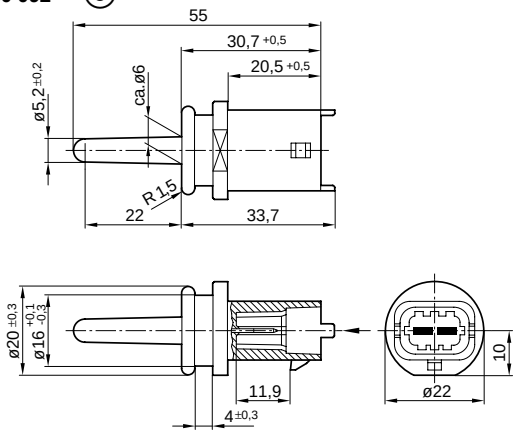

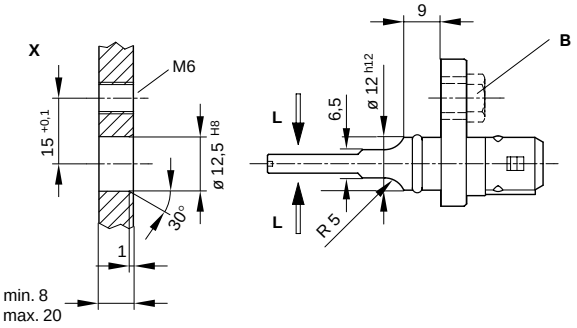

Characteristic curve 1.

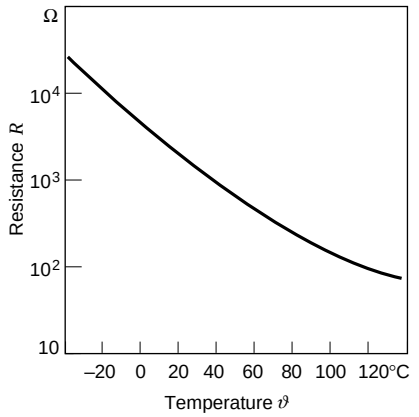

Characteristic curve 2.

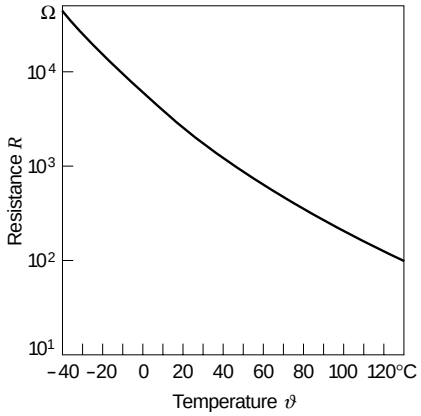

Design and function

NTC sensor:
The sensing element of an NTC temperature sensor (NTC = **N**egative **T**emperature **C**oefficient), is a resistor comprised of metal oxides and oxidized mixed crystals. This mixture is produced by sintering and pressing with the addition of binding agents. For automotive applications, NTC resistors are enclosed in a protective sheath.
If NTC resistors are exposed to external heat, their resistance drops drastically and, provided the supply voltage remains constant, their input current climbs rapidly. This property can be utilised for temperature measurement. NTC resistors are suitable for an extremely wide range of ambient conditions, and with them it is possible to measure a wide range of temperatures.

Installation instructions

Installation is to be such that the front part of the sensing element is directly exposed to the air flow.

NTC temperature sensors

Measurement of liquid temperatures from –40 °C to +130 °C

● For a wide variety of liquid-temperature measurements using temperature-dependent resistors.

NTC temperature sensor
Plastic-sheathed NTC resistor in a brass housing

Design and function
NTC sensor:
The sensing element of the NTC temperature sensor (NTC = **N**egative **T**emperature **C**oefficient) is a resistor comprised of metal oxides and oxidized mixed crystals. This mixture is produced by sintering and pressing with the addition of binding agents.
For automotive applications, NTC resistors are enclosed in a protective housing.
If NTC resistors are exposed to external heat, their resistance drops drastically and, provided the supply voltage remains constant, their input current climbs rapidly. This property can be utilised for temperature measurement. NTC resistors are suitable for use in the most varied ambient conditions, and with them it is possible to measure a wide range of liquid temperatures.

Note
Each 2-pole plug requires 1 plug housing, 2 contact pins, and 2 individual gaskets. For automotive applications, original AMP crimping tools must be used.

Explanation of symbols
R Resistance
ϑ Temperature

Temperature sensor (principle)
1 Electrical connection
2 Housing
3 NTC resistor

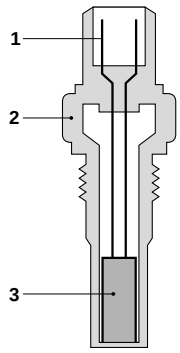

Diagram.

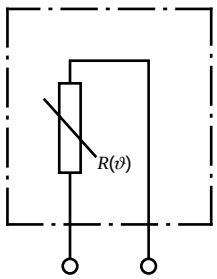

Characteristic curve.

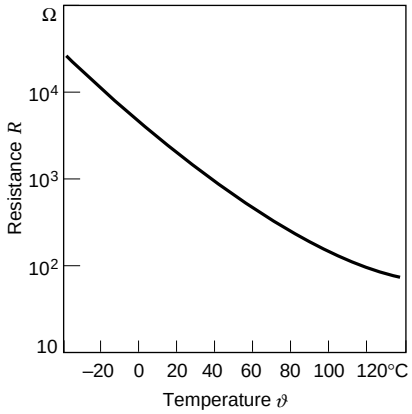

Dimension drawing.
S Plug
F Blade terminal
SW A/F size

0 280 130 026

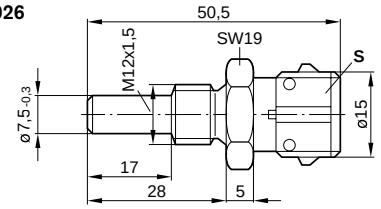

0 281 002 209

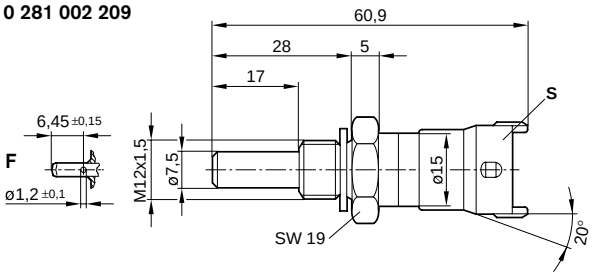

0 280 130 093,
0 281 002 170

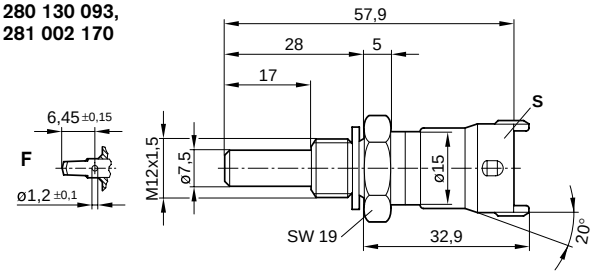

0 281 002 412

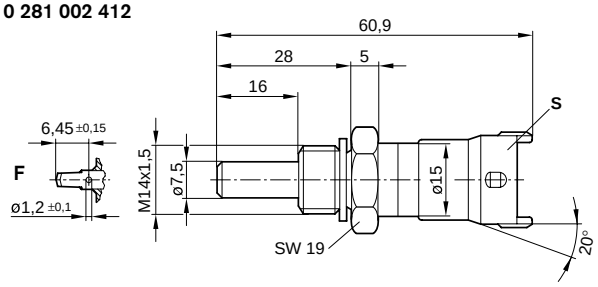

Technical data

Part number			**0 280 130 026**	**0 280 130 093**	**0 281 002 170**	**0 281 002 209**	**0 281 002 412**
Application/medium			Water	Water	Oil/Water	Water	Water
Measuring range		°C	–40...+130	–40...+130	–40...+150	–40...+130	–40...+130
Tolerance at	+20 °C	°C	1.2	1.2	±1.5	±1.5	±1.5
	+100 °C	°C	3.4	3.4	±0.8	±0.8	±0.8
Nominal resistance at 20 °C		kΩ	2.5 ±5 %	2.5 ±5 %	2.5 ±6 %	2.5 ±6 %	2.5 ±6 %
Electrical resistance at	–10 °C	kΩ	8.26…10.56	8.727...10.067	8.244...10.661	8.244...10.661	8.244...10.661
	+20 °C	kΩ	2.28…2.72	2.375...2.625	2.262...2.760	2.262...2.760	2.262...2.760
	+80 °C	kΩ	0.290…0.364	–	0.304…0.342	0.304…0.342	0.304…0.342
Nominal voltage		V	≤ 5	≤ 5	≤ 5	≤ 5	≤ 5
Measured current, max.		mA	1	1	1	1	1
Thermal time constant		s	44	44	15	15	15
Max. power loss at $\Delta T \approx 1K$ and stationary air 23 °C		$m \cdot s^{-2}$	100	≤ 300	≤ 300	≤ 300	≤ 300
Degree of protection [1])				IP 54A	IP 64K	IP 64K	IP 64K IP 64K
Thread			M 12 x 1.5	M 12 x 1.5	M 12 x 1.5	M 12 x 1.5	M 14 x 1.5
Corrosion-tested as per			DIN 50 018	DIN 50 018	DIN 50 021 [2])	DIN 50 021 [2])	DIN 50 021 [2])
Plugs			Jetronic, Tin-plated pins	Compact 1, Tin-plated pins	Compact 1, Gold-plated pins	Compact 1.1, Tin-plated pins	Compact 1.1, Tin-plated pins
Tightening torque		Nm	25	18	18	25	20

[1]) With single-conductor sealing
[2]) Saline fog 384 h

Accessories

For 0 280 130 026

Designation	Part number
Connector	**1 237 000 036**

For 0 280 130 093, 0 281 002 170

Designation	For cable cross-section	Part number
Plug housing	–	**1 928 403 137**
Contact pins	0.5 ... 1.0 mm²	**1 987 280 103**
	1.5 ... 2.5 mm²	**1 987 280 105**
Individual gaskets	0.5 ... 1.0 mm²	**1 987 280 106**
	1.5 ... 2.5 mm²	**1 987 280 107**

For 0 281 002 209, 0 281 002 412

Designation	For cable cross-section	Part number
Plug housing	–	**1 928 403 874**
Contact pins	0.5 ... 1.0 mm²	**1 928 498 060**
	1.5 ... 2.5 mm²	**1 928 498 061**
Individual gaskets	0.5 ... 1.0 mm²	**1 928 300 599**
	1.5 ... 2.5 mm²	**1 928 300 600**

Hot-film air-mass meter, type HFM 2

Measurement of air-mass throughflow up to 1080 kg / h

Q_m / U

- Measurement of air mass (gas mass) throughflow per unit of time, independent of density and temperature.
- Extensive measuring range.
- Highly sensitive, particularly for small changes in flow rate.
- Wear-free since there are no moving parts.
- Insensitive to dirt and contamination.

Application
Measurement of air-mass flow rate to provide data needed for clean combustion. Air-mass meters are suitable for use with other gaseous mediums.

Design and function
The sensor element comprises a ceramic substrate containing the following thick-film resistors which have been applied using silk-screen printing techniques: Air-temperature-sensor resistor R_ϑ, heater resistor R_H, sensor resistor R_S, and trimmer resistor R_1.
The heater resistor R_H maintains the platinum metallic-film resistor R_S at a constant temperature above that of the incoming air. The two resistors are in close thermal contact.
The temperature of the incoming air influences the resistor R_ϑ with which the trimmer resistor R_1 is connected in series. Throughout the complete operating-temperature range it compensates for the bridge circuit's temperature sensitivity. Together with R_2 and R_ϑ, R_1 forms one arm of the bridge circuit, while the auxiliary resistor R_3 and sensor resistor R_S form the other arm. The difference in voltage between the two arms is tapped off at the bridge diagonal and used as the measurement signal.
The evaluation circuit is contained on a second thick-film substrate. Both hybrids are integrated in the plastic housing of the plug-in sensor.
The hot-film air-mass meter is a thermal flowmeter. The film resistors on the ceramic substrate are exposed to the air mass under measurement. For reasons associated with flow, this sensor is far less sensitive to contamination than, for example, a hot-wire air-mass meter, and there is no need for the ECU to incorporate a self-cleaning burn-off function.

Characteristic curves.

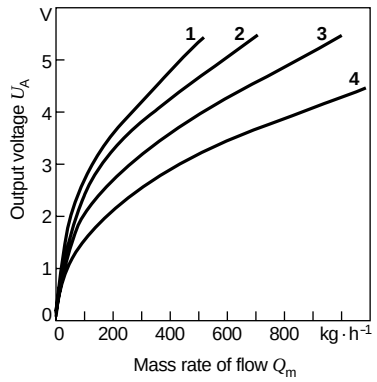

Operating principle.

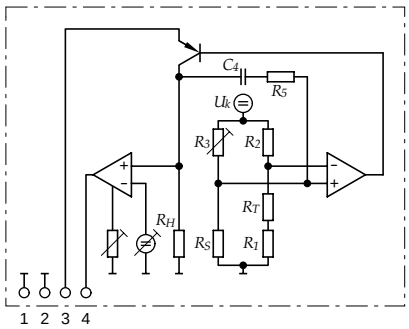

Technical data / Range

Part number		0 280 217 102	0 280 217 120 0 280 217 107	0 280 217 519	0 280 217 801
Characteristic curve		1	2	3	4
Installation length L	mm	130	130 96	130	130
Air-flow measuring range	kg · h⁻¹	10...350	10...480	12...640	20...1080
Accuracy referred to measured value	%	±4	±4	±4	±4
Supply voltage	V	14	14	14	14
Input current					
at 0 kg · h⁻¹	A	≤ 0,25	≤ 0,25	≤ 0,25	≤ 0,25
at $Q_{m\ nom.}$	A	≤ 0,8	≤ 0,8	≤ 0,8	≤ 0,8
Time constant [1])	ms	≤20	≤20	≤20	≤20
Temperature range					
Sustained	°C	–30...+110	–30...+110	–30...+110	–30...+110
Short-term	°C	–40...+125	–40...+125	–40...+125	–40...+125
Pressure drop at nominal air mass hPa	mbar	<15	<15	<15	<15
Vibration acceleration max.	m · s⁻²	150	150	150	150

[1]) In case of sudden increase of the air-mass flow from 10 kg · h⁻¹ auf 0.7 $Q_{m\ nominal}$, time required to reach 63% of the final value of the air-mass signal.

Dimension drawings.
E Plug-in sensor, **M** Measurement venturi, S1/S2 Plug connection

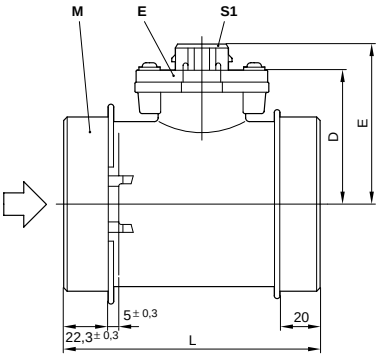

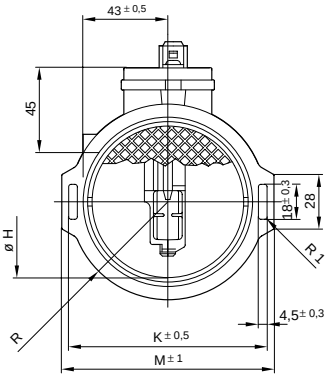

Ø A	Ø B	C	D	E	H	K	L	M	R	Measure-ment venturi	Plug-in connection	Part number
60	66	70	73	86	33	75	130	82	37	KS	S1	**0 280 217 102**
70	76	50	69	82	34.8	–	96	–	42	KS	S1	**0 280 217 107**
70	76	70	69	82	33.5	85	130	92	42	KS	S2	**0 280 217 120**
80	86	70	73	86	39	–	130	–	–	KS	S2	**0 280 217 519**
95.6	102	70	76.2	91.2	45	110	130	117	54	Alu	S1	**0 280 217 801**

S1

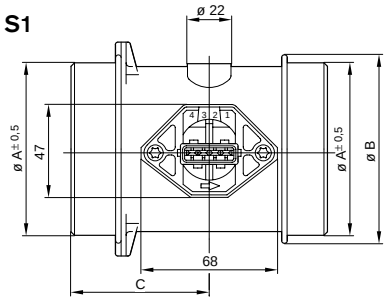

S2

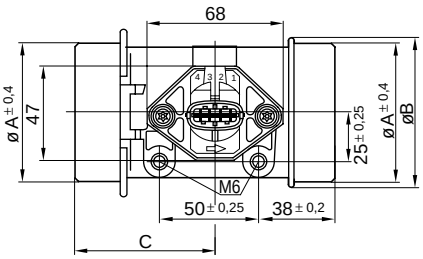

Plug-in sensor.
1 Sensor, **2** Hybrid, **3** Power module,
4 Mounting plate, **5** Heat sink, **6** Plug housing

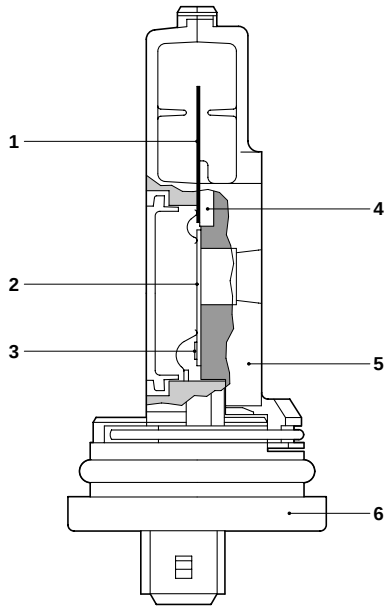

Sensor element with thick-film resistors.
Q_M Mass rate of flow, R_1 Trimmer resistor,
R_H Heater resistor, R_S Sensor resistor,
R_T Air-temperature measuring resistor,
A Front, **B** Rear

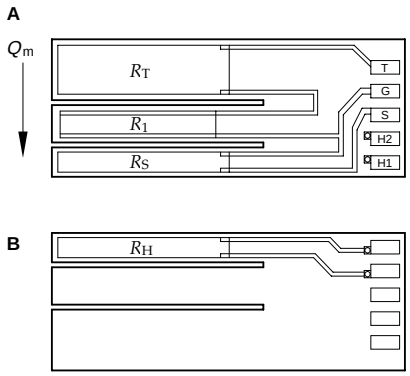

Installation instructions
Water and other liquids must not collect in the measurement venturi. The measurement venturi must therefore be inclined by at least 5° relative to the horizontal. Since care must be taken that the intake air is free of dust, it is imperative that an air filter is fitted.

Explanation of symbols:
R_1 Trimmer resistor
R_2, R_3 Auxiliary resistors
R_5, C_4 RC element
R_H Heater resistor
R_S Platinum metal-film resistor
R_T Resistance of the air-temperature-sensor resistor
U_K Bridge supply voltage
U_A Output voltage
U_V Supply voltage

Connector-pin assignment
Pin 1 Ground
Pin 2 U_A (–)
Pin 3 U_V
Pin 4 U_A (+)

Accessories

For 0 280 217 102, .. 107, .. 801

Plug housing	**1 284 485 118**
Receptacle	**1 284 477 121** [1])
Protective cap	**1 280 703 023** [1])

Each 4-pole plug requires 1 plug housing, 4 receptacles, and 1 protective cap.
[1]) Quantity 5 per package

For 0 280 217 120, .. 519

Desig-nation	For conductor cross-section	Part number
Plug housing	–	**1 928 403 112**
Contact pin	0.5...1.0 mm²	**1 987 280 103**
	1.5...2.5 mm²	**1 987 280 105**
Individual gasket	0.5...1.0 mm²	**1 987 280 106**
	1.5...2.5 mm²	**1 987 280 107**

Each 4-pole plug requires 1 plug housing, 4 contact pins, and 4 individual gaskets.

Note
For automotive applications, original AMP crimping tools must be used.

Hot-film air-mass meter, Type HFM 5

Measurement of air-mass throughflow up to 1000 kg/h

Q_m / U

- Compact design.
- Low weight.
- Rapid response.
- Low power input.
- Return-flow detection.

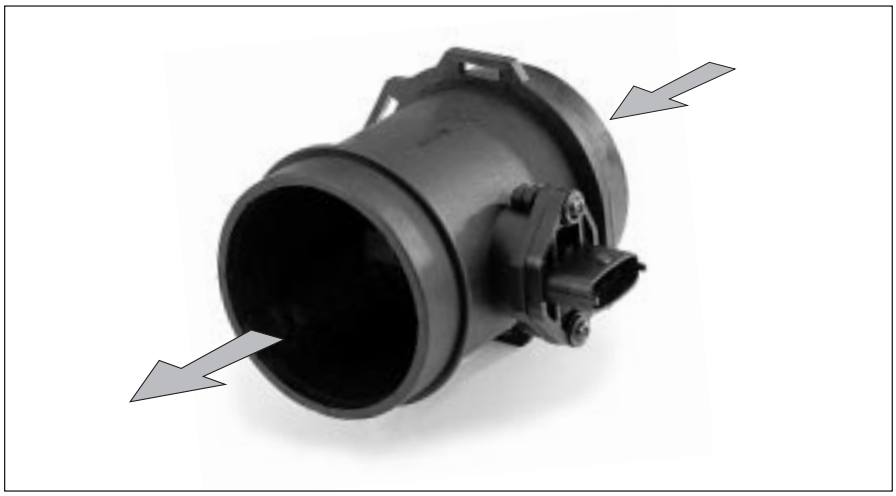

Application
In order to comply with the vehicle emission limits demanded by law, it is necessary to maintain a given air/fuel ratio exactly.
This requires sensors which precisely register the actual air-mass flow and output a corresponding electrical signal to the open and closed-loop control electronics.

Design
The micromechanical sensor element is located in the plug-in sensor's flow passage. This plug-in sensor is suitable for incorporating in the air filter or, using a measurement venturi, in the air-intake passages. There are different sizes of measurement venturi available depending upon the air throughflow. The micromechanical measuring system uses a hybrid circuit, and by evaluating the measuring data is able to detect when return flow takes place during air-flow pulsation.

Operating principle
The heated sensor element in the air-mass meter dissipates heat to the incoming air. The higher the air flow, the more heat is dissipated. The resulting temperature differential is a measure for the air mass flowing past the sensor.
An electronic hybrid circuit evaluates this measuring data so that the air-flow quantity can be measured precisely, and its direction of flow.
Only part of the air-mass flow is registered by the sensor element. The total air mass flowing through the measuring tube is determined by means of calibration, known as the characteristic-curve definition.

Technical data / range

Nominal supply voltage U_N	14 V
Supply-voltage range U_V	8...17 V
Output voltage U_A	0...5 V
Input current I_V	< 0.1 A
Permissible vibration acceleration	≤ 150 ms^{-2}
Time constant τ_{63} [1])	≤ 15 ms
Time constant τ_Δ [2])	≤ 30 ms
Temperature range	–40...+120 °C [3])

Part number	**0 280 217 123**	**0 280 218 019**	**0 280 217 531**	**0 280 218 008**	**0 281 002 421**
Measuring range Q_m	8...370 kg/h	10...480 kg/h	12...640 kg/h	12...850 kg/h	15...1000 kg/h
Accuracy [4])	≤ 3%	≤ 3%	≤ 3%	≤ 3%	≤ 3%
Fitting length L_E	22 mm	22 mm	22 mm	16 mm	22 mm
Fitting length L_A	20 mm	20 mm	20 mm	16 mm	20 mm
Installation length L	96 mm	96 mm	130 mm	100 mm	130 mm
Connection diam. D	60 mm	70 mm	80 mm	86/84 mm [6])	92 mm
Venturi ID	50 mm	62 mm	71 mm	78 mm	82 mm
Pressure drop at nominal air mass [5])	< 20 hPa	< 15 hPa	< 15 hPa	< 15 hPa	< 15 hPa
Temperature sensor	Yes	Yes	Yes	No	Yes
Version	1	2	3	4	5

[1]) In case of sudden increase of the air-mass flow from 10 kg · h^{-1} auf 0,7 $Q_{m\,nominal}$, time required to reach 63% of the final value of the air-mass signal.
[2]) Period of time in case of a throughflow jump of the air mass $|\Delta m/m| \leq 5\%$.
[3]) For a short period up to +130 °C.
[4]) $|\Delta Q_m/Q_m|$: The measurement deviation ΔQ_m from the exact value, referred to the measured value Q_m.
[5]) Measured between input and output
[6]) Inflow/outflow end

Accessories for connector

Plug housing	Contact pins	Individual gaskets	For conductor cross-section
1 928 403 836	**1 987 280 103**	**1 987 280 106**	0.5...1 mm^2
	1 987 280 105	**1 987 280 107**	1.5...2.5 mm^2

Note: Each 5-pole plug requires 1 plug housing, 5 contact pins, and 5 individual gaskets.
For automotive applications, original AMP crimping tools must be used.

Application
In internal-combustion engines, this sensor is used for measuring the air-mass flow so that the injected fuel quantity can be adapted to the presently required power, to the air pressure, and to the air temperature.

Explanation of symbols

Q_m	Air-mass flow rate
ΔQ_m	Absolute accuracy
$\Delta Q_m/Q_m$	Relative accuracy
τ_Δ	Time until measuring error is ≤ 5%
τ_{63}	Time until measured-value change 63%

Function diagram with connector-pin assignment.
1 Additional temperature sensor ϑ_u (not on version 4, Part number 0 280 218 008),
2 Supply voltage U_V, **3** Signal ground, **4** Reference voltage 5 V, **5** Measurement signal U_A.
ϑ Temperature-dependence of the resistor, R_H Heater resistor, U_K Constant voltage

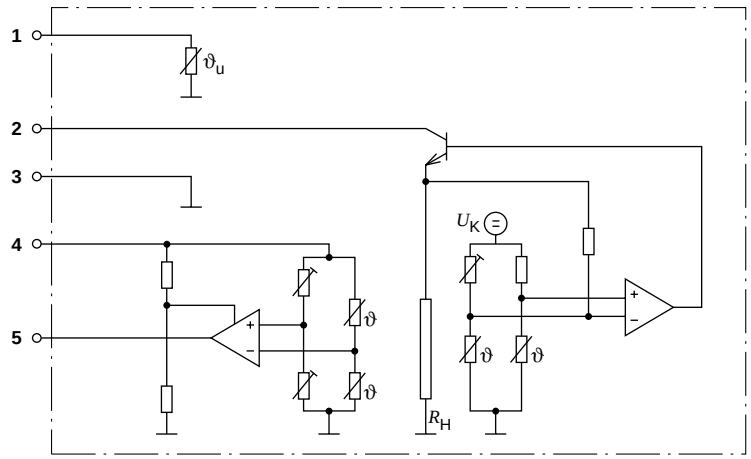

HFM 5 plug-in sensor design.
1 Measuring-passage cover, **2** Sensor,
3 Mounting plate, **4** Hybrid-circuit cover,
5 Hybrid, **6** Plug-in sensor, **7** O-ring,
8 Auxiliary temperature sensor.

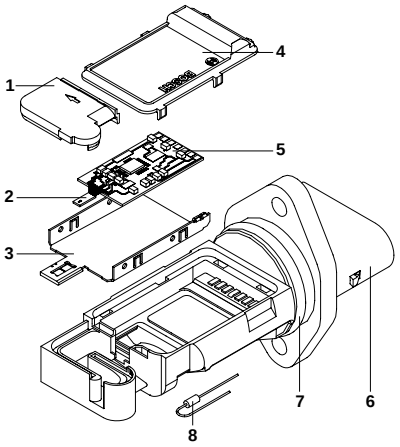

Output voltage U_A = f(Q_m) of the air-mass meter

Part number	0 280 217 123	0 280 218 019	0 280 217 531	0 280 218 008	0 280 002 421
Characteristic curve	1	2	3	4	5
Q_m/kg/h	U_A/V	U_A/V	U_A/V	U_A/V	U_A/V
8	1.4837	1.2390	–	–	–
10	1.5819	1.3644	1.2695	–	–
15	1.7898	1.5241	1.4060	1.3395	1.2315
30	2.2739	1.8748	1.7100	1.6251	1.4758
60	2.8868	2.3710	2.1563	2.0109	1.8310
120	3.6255	2.9998	2.7522	2.5564	2.3074
250	4.4727	3.7494	3.5070	3.2655	2.9212
370	4.9406	4.1695	3.9393	3.6717	3.2874
480	–	4.4578	4.2349	3.9490	3.5461
640	–	–	4.5669	4.2600	3.8432
850	–	–	–	4.5727	4.1499
1000	–	–	–	–	4.3312

Air-mass meter output voltage.

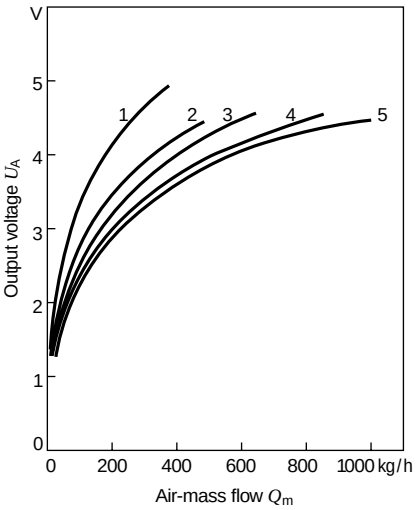

Temperature-dependence R_ϑ = f(ϑ) of the temperature sensor

Temperature ϑ	°C	–40	–30	–20	–10	±0	10	20	30	40
Resistance R_ϑ	kΩ	39.26	22.96	13.85	8.609	5.499	3.604	2.420	1.662	1.166
Temperature ϑ	°C	50	60	70	80	90	100	110	120	130
Resistance R_ϑ	Ω	835	609	452	340	261	202	159	127	102

Temperature-resistance diagram of the temperature sensor.

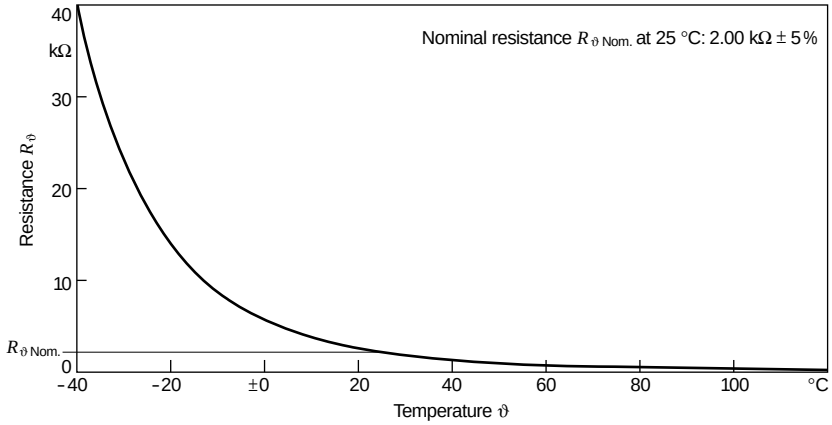

Dimensions overview of the HFM 5.
1 Plug-in sensor, **2** Throughflow direction,
3 Measurement venturi.

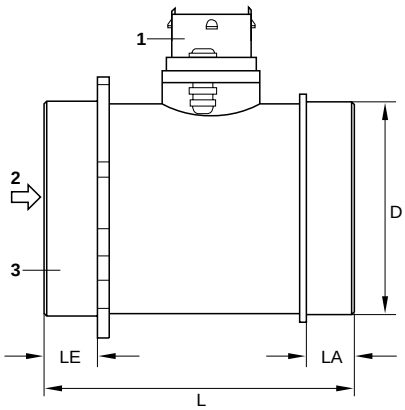

“Lambda” oxygen sensors, Type LSM 11

For measuring the oxygen content

● Principle of the galvanic oxygen concentration cell with solid electrolyte permits measurement of oxygen concentration, for instance in exhaust gases.
● Sensors with output signal which is both stable and insensitive to interference, as well as being suitable for extreme operating conditions.

Application

Combustion processes
– Oil burners
– Gas burners
– Coal-fired systems
– Wood-fired systems
– Bio refuse and waste
– Industrial furnaces

Engine-management systems
– Lean-burn engines
– Gas engines
– Block-type thermal power stations

Industrial processes
– Packaging machinery and installations
– Process engineering
– Drying plants
– Hardening furnaces
– Metallurgy (steel melting)
– Chemical industry (glass melting)

Measuring and analysis processes
– Smoke measurement
– Gas analysis
– Determining the Wobb index

Range

Sensor

Total length = 2500 mm	**0 258 104 002***
Total length = 650 mm	**0 258 104 004**

* Standard version

Accessories

Connector for heater element	
Plug housing	**1 284 485 110**
Receptacles [1])	**1 284 477 121**
Protective cap	**1 250 703 001**
Connector for the sensor	
Coupler plug	**1 224 485 018**
Blade terminal [1])	**1 234 477 014**
Protective cap	**1 250 703 001**
Special grease for the screw-in thread	
Tin 120 g	**5 964 080 112**

[1]) 5 per pack
2 needed in each case

Special accessories

Please enquire regarding analysing unit LA2. This unit processes the output signals from the Lambda oxygen sensors listed here, and displays the Lambda values in digital form. At the same time, these values are also made available at an analog output, and via a multislave V24 interface.

Installation instructions

The Lambda sensor should be installed at a point which permits the measurement of a representative exhaust-gas mixture, and which does not exceed the maximum permissible temperature. The sensor is screwed into a mating thread and tightened with 50…60 N · m.

– Install at a point where the gas is as hot as possible.
– Observe the maximum permissible temperatures.
– As far as possible install the sensor vertically, whereby the electrical connections should point upwards.
– The sensor is not to be fitted near to the exhaust outlet so that the influence of the outside air can be ruled out. The exhaust-gas passage opposite the sensor must be free of leaks in order to avoid the effects of leak-air.
– Protect the sensor against condensation water.
– The sensor body must be ventilated from the outside in order to avoid overheating.
– The sensor is not to be painted, nor is wax to be applied or any other forms of treatment. Only the recommended grease is to be used for lubricating the threads.
– The sensor receives the reference air through the connection cable. This means that the connector must be clean and dry. Contact spray, and anti-corrosion agents etc. are forbidden.
– The connection cable must not be soldered. It must only be crimped, clamped, or secured by screws.

Technical data

Application conditions	
Temperature range, passive (storage-temperature range)	–40…+100 °C
Sustained exhaust-gas temperature with heating switched on	+150…+600 °C
Permissible max. exhaust-gas temperature with heating switched on (200 h cumulative)	+800 °C
Operating temperature	
of the sensor-housing hexagon	≤ +500 °C
At the cable gland	≤ +200 °C
At the connection cable	≤ +150 °C
At the connector	≤ +120 °C
Temperature gradient at the sensor-ceramic front end	≤ +100 K/s
Temperature gradient at the sensor-housing hexagon	≤ +150 K/s
Permissible oscillations at the hexagon	
Stochastic oscillations – acceleration, max.	≤ 800 m · s^{-2}
Sinusoidal oscillations – amplitude	≤ 0.3 mm
Sinusoidal oscillations – acceleration	≤ 300 m · s^{-2}
Load current, max.	±1 µA
Heater element	
Nominal supply voltage (preferably AC)	12 V_{eff}
Operating voltage	12…13 V
Nominal heating power for ϑ_{Gas} = 350 °C and exhaust-gas flow speed of ≈ 0.7 m · s^{-1} at 12 V heater voltage in steady state	≈ 16 W
Heater current at 12 V steady state	≈ 1.25 A
Insulation resistance between heater and sensor connection	> 30 MΩ
Data for heater applications	
Lambda control range λ	1.00…2.00
Sensor output voltage for λ = 1.025…2.00 at ϑ_{Gas} = 220 °C and a flow rate of 0.4…0.9 m · s^{-1}	68…3.5 mV [2])
Sensor internal resistance R_i~ in air at 20 °C and at 12 V heater voltage	≤ 250 Ω
Sensor voltage in air at 20 °C in as-new state and at 13 V heater voltage	–9...–15 mV [3])
Manufacturing tolerance $\Delta\lambda$ in as-new state (standard deviation 1 s) at ϑ_{Gas} = 220 °C and a flow rate of approx. 0.7 m · s^{-1}	
at λ = 1.30	≤ ±0.013
at λ = 1.80	≤ ±0.050
Relative sensitivity $\Delta U_S/\Delta\lambda$ at λ = 1.30	0.65 mV/0.01
Influence of the exhaust-gas temperature on sensor signal for a temperature increase from 130 °C to 230 °C, at a flow rate ≤ 0.7 m · s^{-1} at λ = 1.30; $\Delta\lambda$	≤ ±0.01
Influence of heater-voltage change ±10 % of 12 V at ϑ_{Gas} = 220 °C	
at λ = 1.30; $\Delta\lambda$	≤ ±0.009
at λ = 1.80; $\Delta\lambda$	≤ ±0.035
Response time at ϑ_{Gas} = 220 °C and approx. 0.7 m · s^{-1} flow rate As-new values for the 66% switching point; λ jump = 1.10 ↔ 1.30	
for jump in the "lean" direction	2.0 s
for jump in the "rich" direction	1.5 s
Guideline value for sensor's "readines for control" point to be reached after switching on oil burner and sensor heater; ϑ_{Gas} ≈ 220 °C; flow rate approx. 1.8 m · s^{-1}; λ = 1.45; sensor in exhaust pipe dia. 170 mm	70 s
Sensor ageing $\Delta\lambda$ in heating-oil exhaust gas after 1,000 h continuous burner operation with EL heating oil; measured at ϑ_{Gas} = 220 °C	
at λ = 1.30	≤ ±0.012
at λ = 1.80	≤ ±0.052
Useful life for ϑ_{Ga} < 300 °C	In individual cases to be checked by customer; guideline value > 10,000 h

[2]) See characteristic curves. [3]) Upon request –8.5...–12 mV.

Warranty claims

In accordance with the general Terms of Delivery A17, warranty claims can only be accepted under the conditions that permissible fuels were used. That is, residue-free, gaseous hydrocarbons and light heating oil in accordance with DIN 51 603.

Dimension drawing.
A Signal voltage, **B** Heater voltage, **C** Cable sleeve and seals, **D** Protective tube, **E** Protective sleeve, **L** Overall length. **ws** White, **sw** Black, **g** Grey.

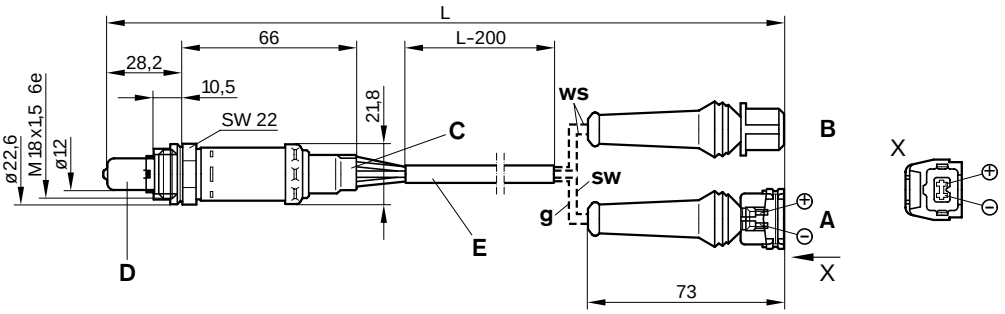

Lambda sensor in exhaust pipe (principle).
1 Sensor ceramic, **2** Electrodes, **3** Contact, **4** Housing contact, **5** Exhaust pipe, **6** Ceramic protective coating (porous).

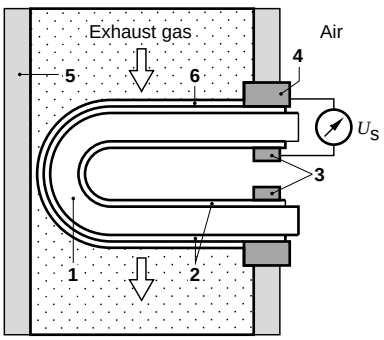

Characteristic curve: Propane gas (lean range).

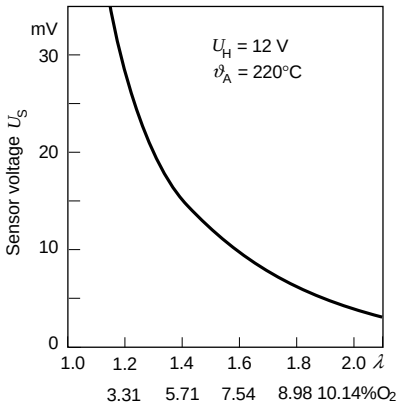

Characteristic curve: Complete range.
1 Closed-loop control λ = 1; **2** Lean control
a Rich A/F mixture, **b** Lean A/F mixture

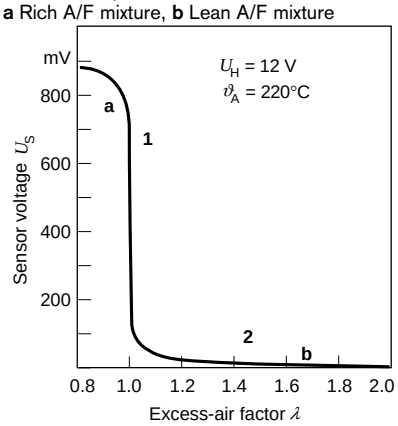

Design and function

The ceramic part of the Lambda sensor (solid electrolyte) is in the form of a tube closed at one end. The inside and outside surfaces of the sensor ceramic have a microporous platinum layer (electrode) which, on the one hand, has a decisive influence on the sensor characteristic, and on the other, is used for contacting purposes. The platinum layer on that part of the sensor ceramic which is in contact with the exhaust gas is covered with a firmly bonded, highly porous protective ceramic layer which prevents the residues in the exhaust gas from eroding the catalytic platinum layer. The sensor thus features good long-term stability.
The sensor protrudes into the flow of exhaust gas and is designed such that the exhaust gas flows around one electrode, whilst the other electrode is in contact with the outside air (atmosphere). Measurements are taken of the residual oxygen content in the exhaust gas.
The catalytic effect of the electrode surface at the sensor's exhaust-gas end produces a step-type sensor-voltage profile in the area around λ = 1. [1])

The active sensor ceramic (ZrO_2) is heated from inside by means of a ceramic Wolfram heater so that the temperature of the sensor ceramic remains above the 350 °C function limit irrespective of the exhaust-gas temperature. The ceramic heater features a PTC characteristic, which results in rapid warm-up and restricts the power requirements when the exhaust gas is hot. The heater-element connections are completely decoupled from the sensor signal voltage (R ≥ 30 MΩ). Additional design measures serve to stabilize the lean characteristic-curve profile of the Type LSM11 Lambda sensor at λ > 1.0...1.5 (for special applications up to λ = 2.0):
– Use of powerful heater (16 W)
– Special design of the protective tube
– Modified electrode/protective-layer system.

[1]) The excess-air factor (λ) is the ratio between the actual and the ideal air/fuel ratio.

The special design permits:
– Reliable control even with low exhaust-gas temperatures (e.g. with engine at idle),
– Flexible installation unaffected by external heating,
– Function parameters practically independent of exhaust-gas temperature,
– Low exhaust-gas values due to the sensor's rapid dynamic response,
– Little danger of contamination and thus long service life,
– Waterproof sensor housing.

Explanation of symbols

U_S Sensor voltage
U_H Heater voltage
ϑ_A Exhaust-gas temperature
λ Excess-air factor [1])
O_2 Oxygen concentration in %

If your requirements go beyond our sensor range, please indicate this on the following data sheet. In the case of modifications, please state the product with which you are familiar in the box below.

Please use the data sheet printed here as a copy and return the copy to us after filling it in appropriately.

Bosch Part No.: ☐ ☐☐☐ ☐☐☐ ☐☐☐

Address:

Robert Bosch GmbH
Abt. KH/PKN
Postfach 41 09 60

D-76225 Karlsruhe
Fax: 07 21/9 42-25 20

Customer address:

Your ref. | Our department/person to contact | Telephone (extension) | Date

Project, application:

Sensor requirements
Measured variable:

Secondary conditions:

Remarks:

Usage conditions

Brief description:

Specifications available Yes ☐ No ☐

Quantity required

☐ Once-only Qty.

Envisaged delivery date

☐ Following quantity on following dates

Date						
Quantity						

☐ Yearly Qty. Monthly Qty.

☐ Advice required